GENERAL NOTES

DIVISION 1 - GENERAL REQUIREMENTS

1. Work performed shall comply with the following:
A. These general notes unless otherwise noted on plans or specifications.
B. International Residential Code (IRC), latest edition.
C. All applicable local and state codes, ordinances and regulations. In areas where the drawings do not address methodology, the contractor shall be bound to perform in strict compliance with the manufacturer's specifications and/or recommendations.

2. On-site verification of all dimensions and conditions shall be the responsibility of the general contractor and his/her subcontractors.
Noted dimensions take precedence over scale.
DO NOT SCALE DRAWINGS.

3. The general notes and typical details apply throughout the job unless otherwise noted or shown.

4. Discrepancies: The contractor shall compare and coordinate all drawings; when in the opinion of the contractor, a discrepancy exists he/she shall promptly report it to the Architect and/or Designer for proper adjustment before proceeding with the work.

5. Omissions: In the event certain features of the construction are not fully shown on the drawings, their construction shall be of the same character as similar conditions that are shown or noted.

6. All work is to be performed in a professional manner and in accordance with standard practice and consistent with manufacturer's and supplier's recommended installation procedures.

7. Dimensions shall be read or calculated and never scaled.
All dimensions are to be rough unless noted otherwise.

8. Before submitting proposals, bidders shall carefully examine the drawings, inspect the site and acquaint themselves with all governing ordinances, laws, etc. and otherwise familiarize themselves with all matters which may affect performance of the work.

9. The Architect and/or Designer will not be responsible for and will not have control over construction means, methods, techniques, sequences or procedures, or for safety precautions or programs in connection with the work and will not be responsible for the failure of the Client or his contractors, subcontractors or anyone performing any of the work, to carry out the work in accordance with the approved contract documents.

10. Any and all drawings and specifications for sitework, plumbing supply or waste, electrical circuitry, mechanical heating, cooling or ventilating, and fabricated trusses are not part of the professional services provided to the Client by the Architect and/or Designer unless specifically included under their agreement. Any discrepancies with these documents by any of the disciplines listed above should be provided in writing to the Architect and/or Designer immediately.

11. Prior to application for building permit, the Contractor shall provide two copies of the shop drawings of all fabricated components. Items requiring shop drawings include, but are not limited; roof & floor trusses, stairs, cabinets, etc. Should the design of configuration of any prefabricated component be modified during construction from previously approved shop drawings, the Architect and/or Designer shall be furnished, prior to fabrication, with revised shop drawings incorporating the revision. If the Architect and/or Designer is not provided with the above information, the Client shall defend, indemnify, and hold harmless the Architect and/or Designer from any claim or suit whatsoever, including but not limited to all payments, expenses or costs included or alleged to have risen from the prefabricated items.

12. The conditions and the assumptions stated in these specifications shall be verified by the Contractor prior to construction for conformance to local codes and conditions. In the event of a discrepancy between the specifications and local codes or conditions, the Contractor shall notify the Architect and/or Designer in writing of the discrepancy and special engineering requirements shall be applied to insure the building's structural integrity.

13. The requirements listed here may be superseded by more stringent information contained elsewhere within these drawings. The more conservative information shall be followed.

14. Soil conditions shall conform to or exceed the following conditions:

Bearing Capacity: Min. 1500 psf, 60 psf lat earth pressure- field verify by a licensed soil engineer, under all footings and slabs on grade.

Water Table: Min. 2'-0" below bottom of all concrete slabs and footings. Footing's, foundation walls, and slabs shall not be placed on or in Marine clays, Peat or other organic materials.

15. Reference Code Analysis on this sheet for design live and dead loads.

16. Bottom of all footings shall extend below the frost line of the locality and a minimum of 1'-0" into the original undisturbed soil compacted to 95% dry density having a load carrying capacity as specified in Note 14, as verified by a soils engineer licensed in the locality where the project is located.

17. All foundation wall backfill under slabs where the distance from edge of wall to edge of undisturbed soil exceeds 16", but less than 4'-0" shall consist of clean, porous soil compacted in 6" layers to 95% dry density or provide #4 rebars at 24" O.C., 1'-0" beyond the edge of the undisturbed soil and 1'-0" into the foundation wall.

18. Free draining granular backfill (SM or better) shall be used against all foundation walls consistent with the architectural plans and details. Equivalent fluid pressure of backfill is not to exceed 45 pcf. If backfill pressure exceeds 45 pcf, then the walls must be designed for actual pressure by a Professional Engineer licensed in the locality where the project is located.

19. Unbalanced fill is not to exceed 7'-0" unless otherwise noted and substantiated by the engineering calculations. Backfill shall not be placed against the walls until the slab-on-grade and framed floors are in place and have reached their design strengths. Proper precautions shall be taken to brace foundation walls when backfilling. Where backfill is required on both sides, backfill both sides simultaneously.

20. Attachment of mud sill - locate anchor bolts max. 6'-0" O.C. and within 12" of ends of wall. Imbed anchor bolts 7" minimum into the foundation wall or slab.

DIVISION 3 - CONCRETE

Concrete
1. The concrete properties shall be as follows (w/ min. compressive strength (f'c) @ 28 days

LOCATION OF CONCRETE	MIN. COMP. STRENGTH (f'c)	SLUMP (IN.)
Basement walls and foundation not exposed to weather	3000 PSI (a)	4 + 1
Basement slabs and interior slabs on grade	3000 PSI (a)	4 + 1
Basement walls, foundations, exterior walls and other vertical concrete work exposed to weather	3000 PSI (b)	4 + 1
Driveways, curbs, walks, patios, porches, steps, stairs and unheated garage floors exposed to weather	3500 PSI (b)	4 + 1

NOTES
a. Concrete in these locations which may be subject to freezing and thawing during construction shall be air-entrained.
b. Concrete shall be air-entrained.

2. All reinforced concrete to be in accordance with the American Concrete Institute ACI-99. All plain concrete to conform to ACI 318.1 and ACI 332R-84 guide to residential cast in place concrete.
3. All reinforcement, anchor bolts, pipe sleeves and other inserts shall be positively secured in place before concrete is placed.
4. Provide 95% backfill compaction at 8" layers at all slabs and footings. Backfill to be of approved material.
5. Reference foundation notes for reinforcement requirements.
6. Tool edge of control joints and at slab to wall joints.
7. Air-entrainment: All concrete subjected to severe weathering potential shall be air-entrained as follows:

Aggregate Size	Air-Entrainment %
3/8" - 1/2"	7.0
3/4" - 1"	6.0

8. Aggregate shall conform to ASTM C-33.
9. Slabs on grade shall be 4" thick concrete and reinforced with 6x6 W1.4xW1.4 WWF unless noted otherwise on plans. Lap mesh 8" in each direction. Place concrete over 6 mil. Polyethylene vapor retarder and 4" min. of coarse aggregate or as recommended by soils engineer. The aggregate layer shall be placed over firm natural subgrade or on compacted and controlled fill. Fill under slabs shall be compacted in 8" layers to 95% max. density. Use air-entrained at all exterior slabs. Pour slabs in alternate panels with a max. of 600 sf and provide control and construction joints at 30'-0" max. or as required to prevent uncontrolled cracking. Vapor retarder may be omitted in garages and utility buildings.
10. Provide 3' x 3' corner bars to match all horizontal reinforcing in walls and footings. All laps shall be a min. of 36 bar diameters. Provide dowels between all footings, walls, and piers to match size and spacing of vertical reinforcing.
11. CONCRETE BASEMENT WALLS: Walls designated as plain concrete shall be reinforced with #4 rebars @ 24" o.c. horizontal or per local codes, whichever is more stringent. Equivalent soil pressure equals 60 pcf. All window and door openings shall be reinforced with a min. of (2) #4 bars and shall extend at least 24 inches beyond the corners of the openings.
12. Concrete footings for the following wall sizes are the minimum required:

8" masonry or concrete wall:	16" wide x 8" deep w/ (2) #4 bars
10" masonry or concrete wall:	20" wide x 12" deep w/ (2) #4 bars
12" masonry or concrete wall:	24" wide x 12" deep w/ (3) #4 bars
3" DIA. Steel Pipe Column:	30" x 30" x 15" deep w/ (3) #4 bars E.W.
Masonry piers and chimneys:	Footings shall have 9" projections x 15" depth minimum w/ #4 bars @ 12" o.c. E.W.

Reinforcing Steel
1. Reinforcing steel shall be high strength new billet steel conforming to ASTM A-615 (Grade 60 - 60,000 PSI). Welded wire fabric shall conform to ASTM A-185.
2. Detailing, fabricating and placing of reinforcement shall be in accordance with ACI-315 "Manual of Standard Practice for Detailing Reinforced Concrete Structures". Furnish support bars and all required accessories in accordance with CRSI standards.
3. All reinforcing bars which intercept perpendicular elements shall terminate in hooks, placed two (2) inches clear from outer face of element.
4. The contractor shall notify the building official or approved entity at least forty-eight (48) hours prior to each concrete pour. No concrete shall be placed until all reinforcing has been installed by the contractor and inspected by the building official.
5. Protective cover for reinforcing steel shall be as follows:
A. Footings and other concrete poured against earth: 3"
B. Slab on grade: Mid-depth of slab
C. Walls:1" at interior face; 2" at exterior face
D. Wire mesh to be placed at mid-depth of slab.

Foundation
1. Footing depths are shown on the sections unless otherwise noted, footings shall project a minimum of 12" into original undisturbed soil and a minimum of 24" below finished grade. Where required, step footings to ratio of 2 horizontal to 1 vertical.
2. Where conditions develop requiring changes in excavations, such changes shall be made as directed by the Geotechnical Engineer.
3. All footing excavations shall be inspected by the building official prior to the placing of any concrete. The building official shall be given notice for this observation.
4. Soil investigation and report: All earth work, compaction and supervision shall be done per recommendations of soil investigation report. Concrete slab and footing calculations are based on a soil bearing capacity of 1,500 psf. If the site test borings indicate lesser values, notify Architect and/or Designer so that necessary structural modifications may be made.

DIVISION 4 - MASONRY

1. Solid masonry walls to have approved truss ties at 16" o.c. vertically above grade and 8" o.c. vertically below grade where unbalanced fill occurs.
2. Brick veneer walls to have non-corrosive metal ties at 16" o.c. vertically and horizontally, and weep holes 24" o.c. at base flashing.
3. Provide at least 8" of solid masonry under concentrated loading conditions.
4. Mortar to conform to ASTM C270, Type N.
5. Locate flashing below first course of masonry above finished grade. See IRC sub-section R703.8 for additional locations.
6. Weep holes shall be located immediately above the flashing.

DIVISION 6 - WOOD & PLASTICS

Lumber Grade
1. All joists, rafters, and headers shall be, unless otherwise noted, SPF #2 with the following minimum allowable stresses and modulus elasticity:
A. Extreme fiber stress: Fb=875 PSI (Repet. Member)
B. Horizontal Shear: Fv=135 PSI
C. Compression perpendicular to grain: Fc=425 PSI
D. Modulus of elasticity: E=1,400,000 PSI
2. Spruce-Pine-Fir #2 may be substituted if substituted species meets or exceeds requirements as noted above.
3. Moisture content: All lumber 6" and deeper shall have a moisture content not greater than 19%, air dried lumber is desired but not necessary. Lumber may be kiln dried, however drying process must be slow and regulated to cause a minimum amount of checking, comparable with air dried stock.
4. All exterior lumber and lumber in contact with masonry or concrete shall be pressure preservative treated in accordance with AWPA standards.

6 x 6 Posts
All 6x6 posts designated #2 SYP shall have the following min. properties: Fb = 850 PSI, Fc per = 375 PSI, Fc par = 525 PSI, E = 1,200,000 PSI

Deck Lumber
Lumber for decks shall be a minimum #2 SYP, pressure treated to 0.40 lb. retention having the following properties: Fc per = 565 PSI, Fv = 90 PSI, E = 1,600,000 PSI, Fb = 1250, 1200, 1050, and 975 PSI for 2x6, 2x8, 2x10, and 2x12 respectively

Laminated Veneer Lumber
LVL's (Laminated Veneer Lumber) shall be 1-3/4" wide, of the depth specified on the plans, and shall be secured together as directed by the manufacturer. They shall have the following minimum properties: Fb = 2,600 PSI for 12" depth, for other multiply by [12/d]0.136, Fv = 285 PSI, Fc per = 700 PSI, E = 1,800,000 PSI, Fc par = 2,400 PSI. LVL's with a modulus of elasticity above 1,800,000 (1.8E) shall be used where noted on the framing plans.

Flitch Beams
1. Flitch beams shall have a minimum Fb = 850 PSI, E = 1,300,000 PSI with 2 rows 1/2" bolts, 16" o.c. top and 32" o.c. at bottom unless otherwise noted.

Joist Hangers
1. All purlins, joists and beams not framed over supporting members shall be supported by means of joist hangers.
2. Joist hangers shall be Simpson unless otherwise noted or an approved equal.

Bolts in Wood Framing
1. All bolts in wood framing shall be standard machine bolts with standard malleable iron washers or steel plate washers.
2. Steel plate washer sizes shall be as follows:
A. 1/2" and 5/8" Diam. Bolts: 2-1/4" sq. x 5/16"
B. 3/4" Diam. Bolts: 2-5/8" x 5/16"
3. Each bolt hole in wood shall be drilled 1/16" larger than diameter of bolt.
4. For sill bolts, see typical details.

Lag Bolts
1. Shall be square headed and of structural grade steel.
2. Washers shall be placed under the head of lag bolts bearing on wood.

Altering Structural Members
1. No structural member shall be omitted; notched, cut, blocking out or relocated without prior approval by Architect and/or Designer. Do not alter sizes of members noted without approval of Architect and/or Designer.

Built-Up Beams
1. Built-up beams or joists formed by a multiple of 3-ply or less 2x members shall be interconnected w/ 16d nails at 8" o.c.
2. Built-up beams formed by a multiple of LVL's shall be fastened w/ 3-rows 16d nails at 12" o.c. at each side w/ 3-ply or per manufacturer recommendation.

Cutting of Beams, Joists and Rafters
Cutting of wood beams, joists and rafters shall be limited to cuts and bored holes not deeper than one sixth (1/6) the depth of the member and shall not be located in the middle one-third (1/3) of the span. Notches at the end of the member shall not exceed one-fourth (1/4) the depth of the member. Holes bored or cut into the joist shall not be closer than two (2) inches to the top or bottom of the joist and the diameter of the hole shall not exceed one-third (1/3) the depth of the joist.

Pipes in Stud Bearing Walls or Shear Walls
Notches in studs of bearing walls shall not be more than 25% the width of the stud. Bored or drilled holes may not exceed 40% the stud and the edge of the hole is to be 5/8" min. from the edge of the stud.

Bridging and Blocking
There shall be not less than one line of bridging in every (8) feet of span in floor, attic and roof framing. The bridging shall consist of not less than one by three inch lumber double nailed at each end or of equivalent metal bracing of equal rigidity. Midspan bridging is not required for floor, attic or roof framing where joist depth does not exceed twelve inches normal. Block solid at all bearing supports where adequate lateral support is not otherwise provided.

Lintel Schedule
Lintels for brick veneer walls: Provide minimum 4" bearing at each end.

Openings to 4'-0":	3 1/2" x 3 1/2" x 1/4" LLV
4'-0" to 5'-6":	4" x 3 1/2" x 5/16" LLV
5'-6" to 7'-6":	5" x 3 1/2" x 5/16" LLV
7'-6" to 9'-6":	6" x 3 1/2" x 5/16" LLV

Wall Sheathing & Subflooring
1. All plywood shall be 1/2" pine, 7/16" OSB or equal and shall be manufactured and graded in accordance with "Product Standard P-1-66" for soft plywood construction and industrial.
2. Each plywood sheet shall bear the "APA" grade trademark.
3. All end joints shall be staggered and shall butt along the center lines of framing members.
4. The face grain of the plywood shall be laid at right angles to the joists and trusses and parallel to the studs.
5. Nails shall be placed 3/8" minimum from the edge of the sheets. The minimum nail penetration into framing members shall be 1-1/2" for 8d nails and 1-3/8" for 10d nails.
6. All floor decks shall be 3/4" min. T & G PLYWOOD (Sturdi-Floor) glued and screwed with #12 wood screws at 6" o.c. on direct edges and at 10" o.c. at intermediate.

Corner Bracing
Unless otherwise noted, brace exterior corners of building with 4 x 8 sheets of OSB or plywood sheathing in thickness to match that of the remaining sheathing, or with metal strap devices installed in accordance with manufacturer instructions or comparable approved structural sheathing installed per manufacturer specifications.

Nailing
1. All nailing shall comply with the IRC, latest edition and all state and local building codes.

Fire Stopping
1. Fire stopping shall be provided to cutoff all concealed draft openings (both vertical and horizontal) in the following locations:
A. In all stud walls and partitions including furred spaces at floor and ceiling levels and not more than 10'-0" apart.
B. Between stair stringers at top and bottom and between studs in line with stair run.
2. Firestops, when of wood, shall be 2" nominal thickness and may be made of gypsum board, cement asbestos, mineral wool or other noncombustible material.
3. Spaces between chimneys and wood framing shall be filled with loose noncombustible material (2" minimum thickness).

Alignment
1. All rafters and joists framing from opposite sides shall lap at least three (3) inches and be spiked together.
2. When framing end to end joists shall be secured together by metal straps.
3. Provide additional studs at point load location to match number of studs above, extend to foundation.

Partitions
1. Lap top plates at corners and intersections.
2. All top plates to be minimum double 2 x 4 (SPF #2). Stagger splice and locate over wall studs.
3. All interior non-bearing walls to be minimum 2 x 4 (SPF Stud Grade) @ 16" o.c.

Wood Roof Trusses
Wood trusses shall be designed in accordance with N.Fo.P.A. standards and for live load deflection of L/360. Calculations, joint strength information (allowable load per square inch or per nail, allowable edge distance, allowable end distances) load test date and other information as necessary shall be submitted to local authorities for approval prior to fabrication. Each truss shall be secured at bearing as required by truss manufacturer and able to withstand lateral and uplift load indicated on truss shop drawings. Truss design shall be certified by a Professional Engineer registered in the governing jurisdiction. Truss diagrams show design intent only. Truss manufacturer to verify all spans, dimensions, pitches, etc. and submit shop drawings to Architect and/or Designer prior to fabrication. Wood roof trusses to be installed per manufacturer's instructions. Truss manufacturer to provide all required hangers, hold-down clips, shear panels and other special hardware. Wood roof trusses to be braced in accordance with TPI/HIB.

Wood Floor Framed Systems

I-Joists
1. "I" Joists: pre-engineered joists. Floor joist manufacturer to supply shop drawings and erection drawings and must be sealed by a Professional Engineer registered in the governing jurisdiction. Floor joist manufacturer to supply connection and bearing details, bridging and bracing details, nominal dimensions and joist layout configurations.
2. 1-1/4" timberstrand band board or equivalent at all end conditions and 2 x 4 cripples at all interior bearing conditions.
3. Floor joists shall be designed to limit deflection to L/480 live load. Total load deflection of L/360. I-Joists supporting marble or ceramic tile shall be limited to L/720 live load deflection.
4. Provide solid blocking on all joists parallel to exterior walls.

DIVISION 7 - THERMAL & MOISTURE CONTROL

Roofing
1. Shingles shall be as noted on the exterior elevations. Install over 1 layer of 15# asphalt saturated felt underlayment.
2. Moisture guard underlayment shall be used at the eaves to a point measured 24" horizontal from the interior face of all exterior insulated walls.

Flashing
1. All flashing to be of the approved corrosion-resistive type and shall be provided where exterior porches, decks or stairs attach to a wall or floor assembly or wood-framed construction. Flash and caulk wood beams and other projections through exterior walls or roof surfaces.
2. All flashing, counter flashing, and coping when of metal shall be of not less than no. 26 U.S. gauge approved corrosions-resistant metal.
3. Provide metal flashing above all windows, doors and capitals.

DIVISION 8 - DOORS AND WINDOWS

Windows
1. All windows shall have insulating glass. Reference floor plans.
2. Sizes indicated on plans are nominal only. Builder to consult with window manufacturer to determine exact sizes, rough openings, etc.
3. Every sleeping room shall have at least one operable window or exterior door approved for emergency egress or rescue.
4. Where windows are provided as a means of egress or rescue they shall have a sill height of not more than 44 inches above the floor.
5. All egress or rescue windows from sleeping rooms must have a minimum net clear opening of 5.7 square feet. The minimum net clear opening height dimension shall be 24 inches. The minimum net clear opening width dimension shall be 20 inches.

Safety and Tempered Glass
Glazing in doors and fixed glazed panels immediately adjacent to doors shall be tempered as per local building code ordinances.

Locations requiring safety or tempered glass shall include but not be limited to the following:
1. Glazing in ingress and means of egress doors except jalousies.
2. Glazing in fixed and sliding panels of sliding (patio) door assemblies and panels in swinging doors.
3. Glazing in storm doors.
4. Glazing in doors and enclosures for bath tubs or showers and glazing in any part of a building wall enclosing these compartments where the bottom edge is less than 60 inches above the drain outlet.
5. Glazing in an individual fixed or operable panel, other than those locations described in items 5 and 6 above, that meets all of the following conditions:
A. Exposed area of an individual pane greater than 9 sq. ft.
B. Bottom edge less than 18 inches above the floor.
C. To edge greater than 36" above the floor.
D. One or more walking surfaces within 36 inches horizontally of the glazing.

DIVISION 9 - FINISHES

Gypsum Wallboard
1. All gypsum wallboard shall be installed in accordance with the provisions of the IRC, latest edition, state and local codes.
2. Gypsum wallboard shall not be installed until weather protection for the installation is provided.
3. All edges and ends of the gypsum wallboard shall occur on the framing members except those edges which are perpendicular to the framing members. All edges of gypsum wallboard shall be in contact with adjoining sheets except in concealed spaces where fire resistant construction is not required.
4. The sizes and spacing of fasteners shall comply with the IRC, latest edition, all state and local codes, and manufacturer recommendations.
5. Provide water resistant drywall at all new tubs and showers. Do not install water resistant drywall over a vapor retarder at tubs and showers.

Attic Ventilation
Enclosed attic truss spaces and enclosed roof rafters shall have cross ventilation for each separate space with screened vented openings protected against the entrance of moisture and rain in accordance with the IRC, latest edition and all state and local codes.

DIVISION 15 - MECHANICAL

Heating, Ventilating and Air Conditioning
1. All work shall be in full accordance with all codes, rules and regulations of the governing agencies.
2. Prefabricated fireplaces and chimneys shall conform to the IRC, latest edition, their listing and shall be installed per the manufacturer's instructions.
3. All work shall be done in a neat and workmanlike manner so as to not needlessly hamper that portion of the work performed by others.
4. Mechanical subcontractor to submit shop drawings indicating duct layouts, condenser location, duct sizes, etc. to the Architect and/or Designer prior to installation. Mechanical subcontractor to review structural shop drawings and notify the Architect and/or Designer of any mechanical and structural conflicts prior to construction.

Plumbing
1. All work shall be in full accordance with all codes, rules and regulations of the governing agencies.
2. All work shall be done in a neat and workmanlike manner so as to not needlessly hamper that portion of the work performed by others.
3. Plumbing subcontractor to review structural shop drawings and notify the Architect and/or Designer of any plumbing, mechanical and structural conflicts prior to construction.

DIVISION 16 - ELECTRICAL

General
1. All work shall be in full accordance with all codes, rules and regulations of governing agencies and shall comply with the requirements of the serving power and telephone companies.

Installation
1. All equipment installed outdoors and exposed to weather shall be weather-proof.
2. Receptacles in kitchen and bathrooms shall be installed above work top unless otherwise noted on drawings.
3. Receptacles shall be installed 12" vertically above finished floor and a maximum of 12'-0" o.c. horizontally. All receptacles within 6'-0" horizontal of a sink lavatory, tub or shower shall be wired to a ground fault interrupter circuit.
4. Wall switches to be at 48" above finished floor.
5. All smoke detectors to be wired in a manner that the activation of one will activate all smoke alarms within the dwelling unit.
6. All electrical outlets in bedrooms shall be protected by arc-fault circuit interrupter per section E3802.9 of the IRC.

CODE ANALYSIS

ZONING	**A-3**
USE GROUP	R-5
CONSTRUCTION TYPE	5B
SPRINKLERS	NO
MAX BUILDING HEIGHT	35 FT
MIN SETBACKS	
FRONT YARD	35 FT
SIDE YARD	25 FT
REAR YARD	25 FT
CODE	**2021 IRC**
DESIGN CRITERIA	**LOUDOUN COUNTY, VA**

SOIL BEARING PRESSURE
1500 psf

SOIL LATERAL PRESSURE
60 pcf

DESIGN LOADS	LIVE	DEAD
LIVING AREA	40 psf	10 psf
BEDROOM AREA	30 psf	10 psf
ROOF	30 psf	10 psf
DECKS	40 psf	10 psf
BALCONY	60 psf	10 psf

GROUND SNOW LOAD
30 psF

WIND SPEED
BASIC: 90 mph
ULTIMATE: 115 mph

FROST LINE DEPTH = 24"

ENERGY COMPLIANCE

WINDOW / DOOR U-FACTOR	.35
SKYLIGHT U-FACTOR	.35
ROOF / CEILING R-VALUE	49
EXTERIOR WALL R-VALUE	15
FLOOR OVER EXTERIOR R-VALUE	19
SLAB PERIMETER R-VALUE	10

PROJECT SCOPE

- INTERIOR RENOVATION AT EXISTING COTTAGE

SQ. FOOT CALCULATIONS

NOTE: SQUARE FOOT CALCULATIONS ARE FROM EXTERIOR SIDE OF FRAMING / FOUNDATION UNLESS NOTED OTHERWISE.

TOTAL AREA
- FIRST FLOOR: 1,224 SF

TOTAL FLOOR AREA: 1,224 SF

SHEET INDEX

A0	PROJECT INFO
A0	SHEET INDEX
A0	PROJECT SCOPE
A0	GENERAL NOTES
A0	CONSTRUCTION NOTES
A1	FLOOR PLAN - EXISTING
A2	ELEVATIONS - EXISTING
A3	FLOOR PLAN - PROPOSED
A4	ELEVATIONS - PROPOSED
A5	ELEVATIONS - PROPOSED
A6	ENLARGED BATH PLANS + ELEVATIONS
A6	ENLARGED KITCHEN PLAN + ELEVATIONS
A7	FINISH MATERIALS SCHEDULE
A8	FINISH MATERIALS SCHEDULE
A9	FINISH MATERIAL PLAN
E1	ELECTRICAL PLANS
S1	STRUCTURAL NOTES + FRAMING PLAN
S2	WALL BRACING PLAN

MEP DRAWING SHEETS

E-100	ELECTRICAL PLAN
ED-100	ELECTRICAL DETAILS
ED-101	ELECTRICAL DETAILS
M-100	MECHANICAL PLAN
M-101	MECHANICAL PLAN
MD-100	MECHANICAL DETAILS
P-100	PLUMBING PLAN
P-101	PLUMBING PLAN
PD-100	PLUMBING DETAILS
PD-101	PLUMBING DETAILS

MARCO'GRADY DESIGN
MARCOGRADY.COM
703.729.5124
ASHBURN, VA 20147
+
TRAVERSE CITY, MI 49684

ALGONKIAN CABIN RENOVATION

CABIN #7
46454 PARK CHALET PL
STERLING, VA 20165

CERTIFIED PROFESSIONAL BUILDING DESIGNER
NATIONAL COUNCIL OF BUILDING DESIGNER CERTIFICATIONS
MARC J. O'GRADY
47-167

DATE	ISSUE
06.19.26	CLIENT REVIEW
08.12.26	CLIENT REVIEW
08.13.26	FOR PERMIT

This is an original design and may not be used or copied under penalty of law. Drawings, specifications, and all other instruments of service are and shall remain the physical and intellectual property of MARC O'GRADY DESIGN whether the projects for which they are created are executed or not.
© 2025-2026 MARC O'GRADY DESIGN

A0

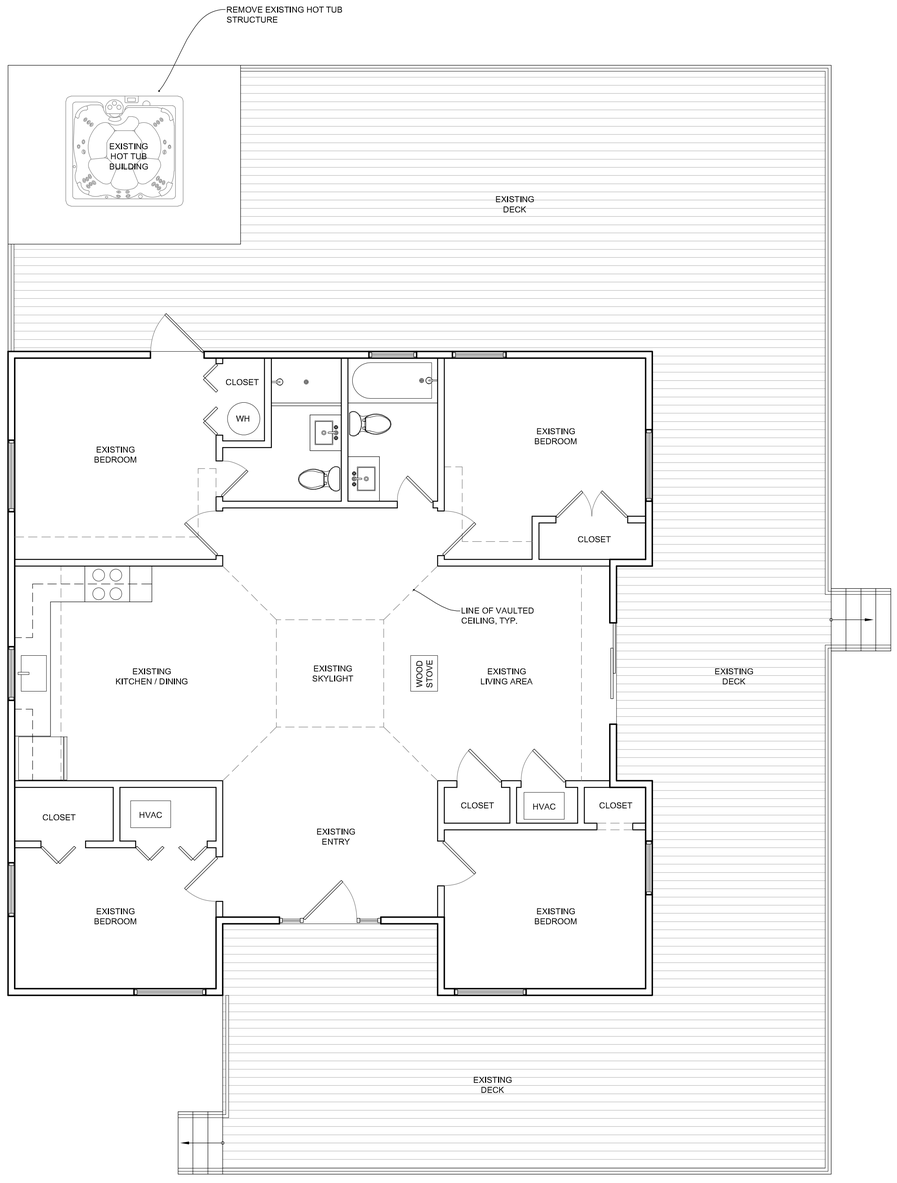

01

FIRST FLOOR PLAN - EXISTING

1/4" = 1'-0"

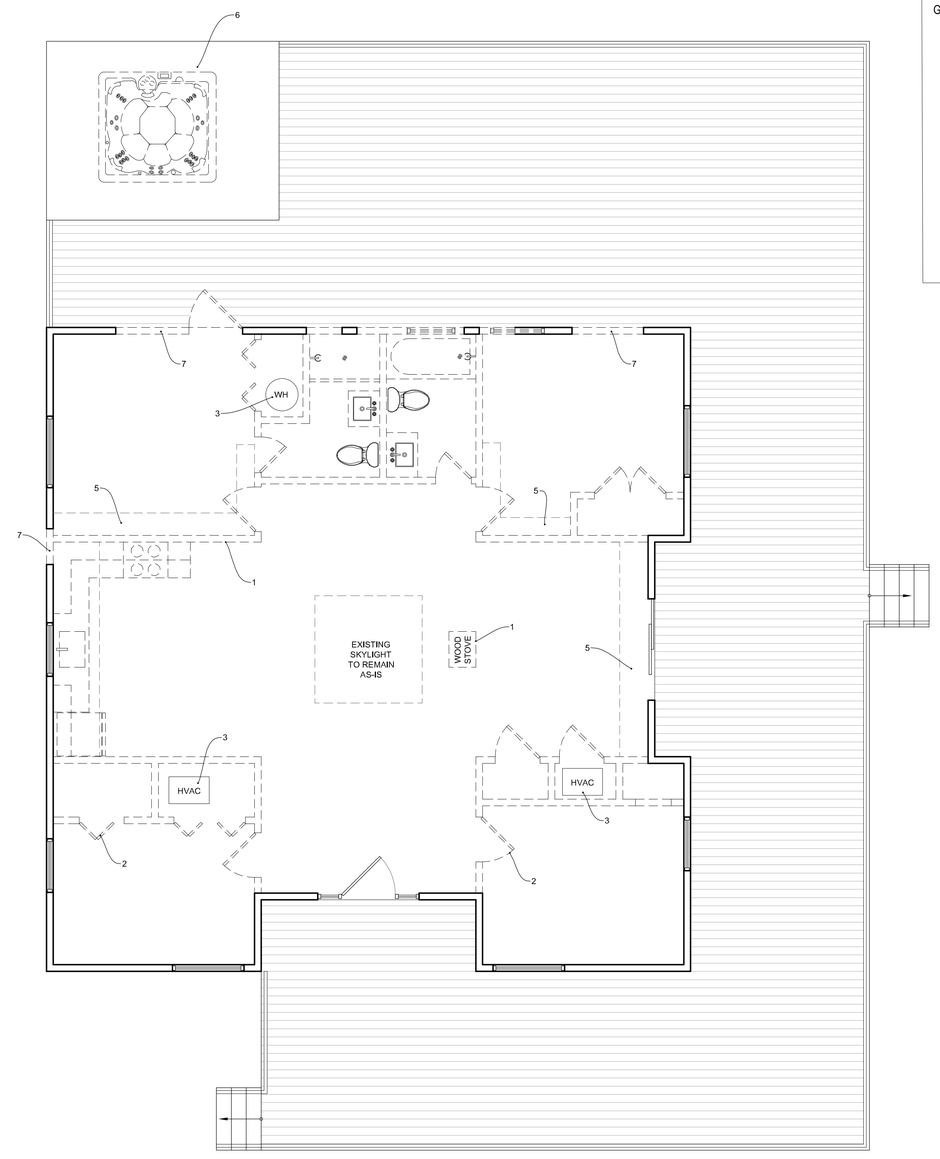

02

FIRST FLOOR PLAN - DEMO

1/4" = 1'-0"

DEMOLITION NOTES:

GENERAL:

-REMOVE ALL INTERIOR FLOOR FINISHES
-REMOVE ALL INTERIOR WALL FINISHES
-REMOVE CEILING FINISH MATERIALS IN BATHROOMS
-REMOVE ALL CABINETRY
-REMOVE ALL COUNTERTOPS
-REMOVE ALL PLUMBING FIXTURES AND PLUMBING LINES ABOVE THE EXISTING SUBFLOOR

1. DEMO ALL INTERIOR WALL FRAMING, TYP.
2. DEMO ALL INTERIOR DOORS, TYP.
3. DEMO EXISTING HVAC EQUIPMENT
4. DEMO EXISTING WATER HEATER
5. DEMO ALL EXISTING BULKHEADS AND DUCTWORK, TYP.
6. DEMO EXISTING HOT TUB STRUCTURE AND HOT TUB
7. DEMO EXTERIOR WALL FRAMING FOR NEW WINDOWS AND DOORS
8. DEMO EXISTING WOOD STOVE AND CHIMNEY PIPE

GENERAL NOTES:

- ON-SITE VERIFICATION OF ALL DIMENSIONS AND CONDITIONS SHALL BE THE RESPONSIBILITY OF THE GENERAL CONTRACTOR AND HIS/HER SUBCONTRACTORS.
- NOTED DIMENSIONS TAKE PRECEDENCE OVER SCALE. DO NOT SCALE DRAWINGS.
- THE GENERAL NOTES AND TYPICAL DETAILS APPLY THROUGHOUT THE JOB UNLESS OTHERWISE NOTED OR SHOWN.
- DISCREPANCIES: THE CONTRACTOR SHALL COMPARE AND COORDINATE ALL DRAWINGS; WHEN IN THE OPINION OF THE CONTRACTOR, A DISCREPANCY EXISTS HE/SHE SHALL PROMPTLY REPORT IT TO THE ARCHITECT AND/OR DESIGNER FOR PROPER ADJUSTMENT BEFORE PROCEEDING WITH THE WORK.

MARCO'GRADY DESIGN

MARCOGRADY.COM
703.729.5124

ASHBURN, VA 20147
+
TRAVERSE CITY, MI 49684

ALGONKIAN CABIN RENOVATION

CABIN #7
46454 PARK CHALET PL
STERLING, VA 20165

CERTIFIED PROFESSIONAL BUILDING DESIGNER
NATIONAL COUNCIL OF BUILDING DESIGNER CERTIFICATION
MARC J. O'GRADY
47-167

DATE:	ISSUE:
06.19.26	CLIENT REVIEW
08.12.26	CLIENT REVIEW
08.13.26	FOR PERMIT

This is an original design and may not be used or copied under penalty of law. Drawings, specifications, and all other instruments of service are and shall remain the physical and intellectual property of MARC O'GRADY DESIGN whether the projects for which they are created are executed or not.

© 2025-2026 MARC O'GRADY DESIGN

A1

01

FRONT ELEVATION - EXISTING
1/4" = 1'-0"

02

RIGHT SIDE ELEVATION - EXISTING
1/4" = 1'-0"

03

REAR ELEVATION - EXISTING
1/4" = 1'-0"

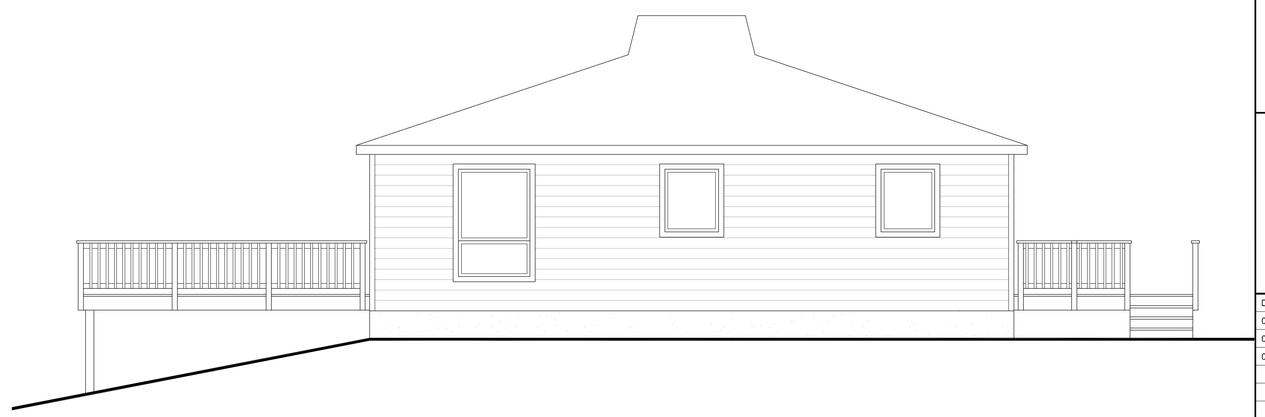

04

LEFT SIDE ELEVATION - EXISTING
1/4" = 1'-0"

MARC O'GRADY DESIGN

MARCOGRADY.COM
703.729.5124

ASHBURN, VA 20147
+
TRAVERSE CITY, MI 49684

ALGONKIAN CABIN RENOVATION

CABIN #7
46454 PARK CHALET PL
STERLING, VA 20165

CERTIFIED PROFESSIONAL BUILDING DESIGNER
NATIONAL COUNCIL OF BUILDING DESIGNER CERTIFICATION
MARC J. O'GRADY
47-167

DATE:	ISSUE:
06.19.26	CLIENT REVIEW
08.12.26	CLIENT REVIEW
08.13.26	FOR PERMIT

This is an original design and may not be used or copied under penalty of law. Drawings, specifications, and all other instruments of service are and shall remain the physical and intellectual property of MARC O'GRADY DESIGN whether the projects for which they are created are executed or not.

© 2025-2026 MARC O'GRADY DESIGN

A2

DOOR SCHEDULE

TAG	QUANTITY	TYPE	STYLE	WIDTH	HEIGHT	R.O. WIDTH	R.O. HEIGHT	SWING	MATERIAL	COLOR	NOTES
D1	1	EXTERIOR	ENTRY	3'-0"	6'-8"	39"	83"	LEFT HAND	TBD	TBD	
D2	1	EXTERIOR	PATIO	6'-0"	6'-8"	75"	83"	DOUBLE	TBD	TBD	SLIDING PATIO DOOR
D3	2	INTERIOR	BEDROOM	2'-6"	6'-8"	33"	83"	LEFT HAND	TBD	TBD / PAINT	
D4	1	INTERIOR	BEDROOM	2'-6"	6'-8"	33"	83"	RIGHT HAND	TBD	TBD / PAINT	
D5	1	INTERIOR	BATHROOM	2'-4"	6'-8"	31"	83"	LEFT HAND	TBD	TBD / PAINT	
D6	1	INTERIOR	BATHROOM	2'-4"	6'-8"	31"	83"	RIGHT HAND	TBD	TBD / PAINT	
D7	2	INTERIOR	CLOSET	4'-0"	6'-8"	51"	83"	DOUBLE	TBD	TBD / PAINT	
D8	1	EXTERIOR	PATIO	VERIFY	6'-8"	VERIFY	83"	DOUBLE	TBD	TBD	SLIDING PATIO DOOR (VERIFY EXISTING OPENING)
TOTAL	10										

NOTE: FINAL DOOR SELECTIONS TO BE APPROVED BY HOMEOWNER

NOTE: ALL INTERIOR DOORS TO BE SOLID CORE UNLESS NOTED OTHERWISE

WINDOW SCHEDULE

TAG	QUANTITY	WIDTH	HEIGHT	TYPE	R.O. SIZE	EGRESS	MULLED	COLOR (EXT / INT)	NOTES
W1	1	3'-0"	2'-0"	AWNING	PER MFR	NO	NO	MATCH EXISTING	MATCH EXISTING WINDOWS (VERIFY)
W2	3	2'-0"	3'-6"	TRANSOM	PER MFR	NO	NO	MATCH EXISTING	MATCH EXISTING WINDOWS (VERIFY)
W3	1	6'-0"	2'-0"	PICTURE	PER MFR	NO	NO	MATCH EXISTING	MATCH EXISTING WINDOWS (VERIFY)
W4	1	4'-0"	3'-0"	PICTURE	PER MFR	NO	NO	MATCH EXISTING	MATCH EXISTING WINDOWS (VERIFY)
TOTAL	6								

NOTE: FINAL WINDOW SELECTIONS TO BE APPROVED BY HOMEOWNER

EGRESS WINDOWS: MEET OR EXCEED CLEAR OPENING AREA OF 5.7sf, MINIMUM CLEAR OPENING WIDTH OF 20" AND CLEAR OPENING HEIGHT OF 24"

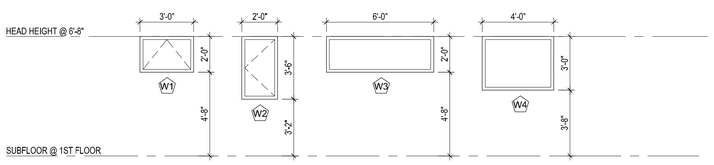

* WINDOW SIZES ARE NOMINAL
* MATCH EXISTING WINDOW COLOR + STYLE

GENERAL NOTES:

- ON-SITE VERIFICATION OF ALL DIMENSIONS AND CONDITIONS SHALL BE THE RESPONSIBILITY OF THE GENERAL CONTRACTOR AND HIS/HER SUBCONTRACTORS.
- NOTED DIMENSIONS TAKE PRECEDENCE OVER SCALE. DO NOT SCALE DRAWINGS.
- THE GENERAL NOTES AND TYPICAL DETAILS APPLY THROUGHOUT THE JOB UNLESS OTHERWISE NOTED OR SHOWN.
- DISCREPANCIES: THE CONTRACTOR SHALL COMPARE AND COORDINATE ALL DRAWINGS; WHEN IN THE OPINION OF THE CONTRACTOR, A DISCREPANCY EXISTS HE/SHE SHALL PROMPTLY REPORT IT TO THE ARCHITECT AND/OR DESIGNER FOR PROPER ADJUSTMENT BEFORE PROCEEDING WITH THE WORK.

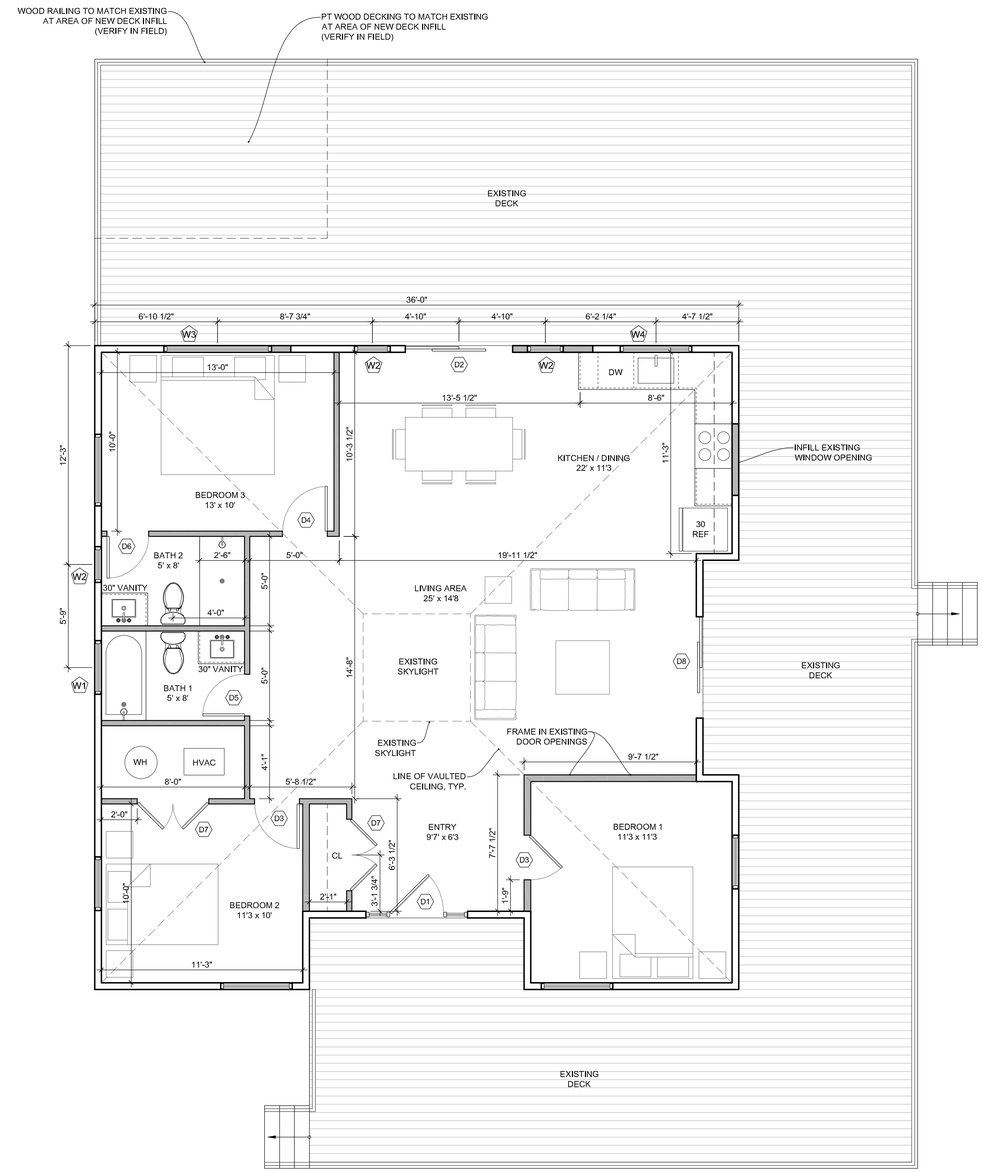

01

FIRST FLOOR PLAN - PROPOSED

1/4" = 1'-0"

3 BR / 2 BATH

MARCO'GRADY DESIGN

MARCOGRADY.COM
703.729.5124

ASHBURN, VA 20147
+
TRAVERSE CITY, MI 49684

ALGONKIAN CABIN RENOVATION

CABIN #7
46454 PARK CHALET PL
STERLING, VA 20165

CERTIFIED PROFESSIONAL BUILDING DESIGNER
NATIONAL COUNCIL OF BUILDING DESIGNER CERTIFICATION
MARC J. O'GRADY
CP-167

DATE:	ISSUE:
06.19.26	CLIENT REVIEW
08.12.26	CLIENT REVIEW
08.13.26	FOR PERMIT

This is an original design and may not be used or copied under penalty of law. Drawings, specifications, and all other instruments of service are and shall remain the physical and intellectual property of MARC O'GRADY DESIGN whether the projects for which they are created are executed or not.

© 2025-2026 MARC O'GRADY DESIGN

A3

01
FRONT ELEVATION - PROPOSED
1/4" = 1'-0"

02
RIGHT SIDE ELEVATION - PROPOSED
1/4" = 1'-0"

MARCO'GRADY DESIGN
MARCOGRADY.COM
703.729.5124
ASHBURN, VA 20147
+
TRAVERSE CITY, MI 49684

ALGONKIAN CABIN RENOVATION

CABIN #7
46454 PARK CHALET PL
STERLING, VA 20165

CERTIFIED PROFESSIONAL BUILDING DESIGNER
NATIONAL COUNCIL OF BUILDING DESIGNER CERTIFICATION
MARC J. O'GRADY
47-167

DATE:	ISSUE:
06.19.26	CLIENT REVIEW
08.12.26	CLIENT REVIEW
08.13.26	FOR PERMIT

This is an original design and may not be used or copied under penalty of law. Drawings, specifications, and all other instruments of service are and shall remain the physical and intellectual property of MARC O'GRADY DESIGN whether the projects for which they are created are executed or not.
© 2025-2026 MARC O'GRADY DESIGN

A4

01

REAR ELEVATION - PROPOSED
1/4" = 1'-0"

02

LEFT SIDE ELEVATION - PROPOSED
1/4" = 1'-0"

MARC O'GRADY DESIGN

MARCOGRADY.COM
703.729.5124

ASHBURN, VA 20147
+
TRAVERSE CITY, MI 49684

ALGONKIAN CABIN RENOVATION

CABIN #7
46454 PARK CHALET PL
STERLING, VA 20165

CERTIFIED PROFESSIONAL BUILDING DESIGNER
NATIONAL COUNCIL OF BUILDING DESIGNER CERTIFICATION
MARC J. O'GRADY
47-167

DATE:	ISSUE:
06.19.26	CLIENT REVIEW
08.12.26	CLIENT REVIEW
08.13.26	FOR PERMIT

This is an original design and may not be used or copied under penalty of law. Drawings, specifications, and all other instruments of service are and shall remain the physical and intellectual property of MARC O'GRADY DESIGN whether the projects for which they are created are executed or not.

© 2025-2026 MARC O'GRADY DESIGN

A5

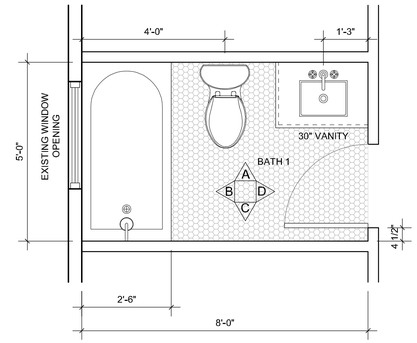

01
BATH 1 - ENLARGED PLAN
1/4" = 1'-0"

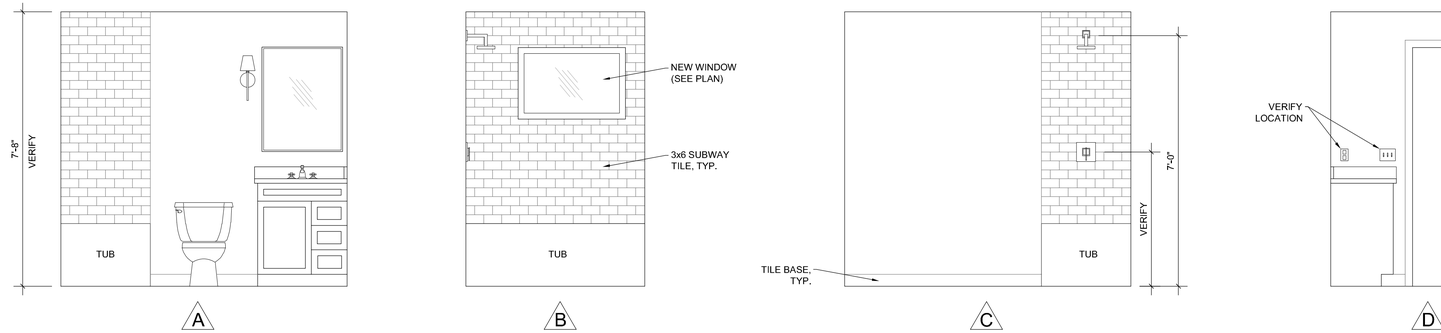

02
BATH 1 - ELEVATIONS
1/4" = 1'-0"

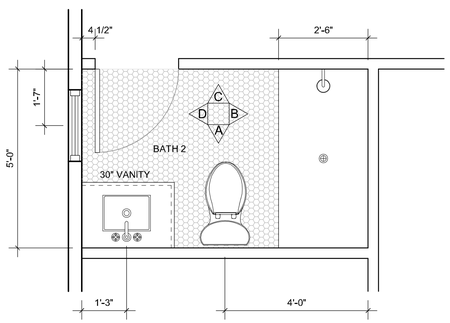

03
BATH 2 - ENLARGED PLAN
1/4" = 1'-0"

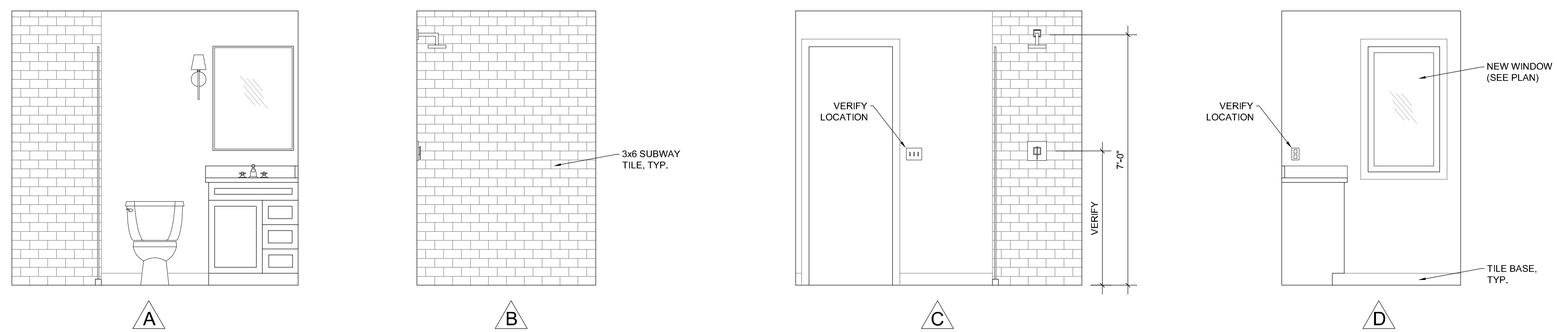

04
BATH 2 - ELEVATIONS
1/4" = 1'-0"

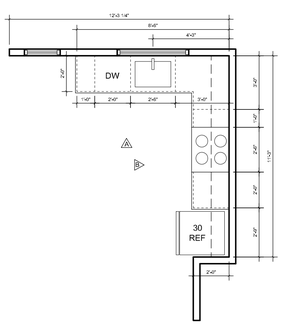

05
KITCHEN - ENLARGED PLAN
1/4" = 1'-0"

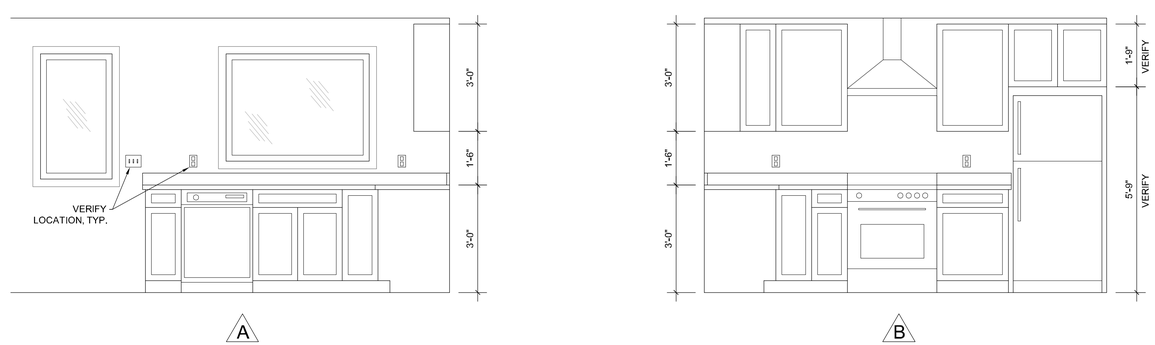

06
KITCHEN - ELEVATIONS
1/4" = 1'-0"

MARCO'GRADY DESIGN
MARCOGRADY.COM
703.729.5124
ASHBURN, VA 20147
+
TRAVERSE CITY, MI 49684

ALGONKIAN CABIN RENOVATION

CABIN #7
46454 PARK CHALET PL
STERLING, VA 20165

CERTIFIED PROFESSIONAL BUILDING DESIGNER
NATIONAL COUNCIL OF BUILDING DESIGNER CERTIFICATION
MARC J. O'GRADY
47-167

DATE	ISSUE
06.19.26	CLIENT REVIEW
08.12.26	CLIENT REVIEW
08.13.26	FOR PERMIT

This is an original design and may not be used or copied under penalty of law. Drawings, specifications, and all other instruments of service are and shall remain the physical and intellectual property of MARC O'GRADY DESIGN whether the projects for which they are created are executed or not.
© 2025-2026 MARC O'GRADY DESIGN

A6

0	LOCATION	ROOM	ITEM	NOTES	BRAND	PRODUCT SELECTION	COLOR / FINISH	SKU/MODEL#	SUPPLIER / WEBSITE
1	1st FLOOR	ENTRY	FLOORING		Optimax Performance	Bradford Honey	Natural	101337228	Floor & Decor
2	1st FLOOR	ENTRY	LIGHT FIXTURE		Visual Comfort & Co.	Payton 1	Black	DJP1131MBK	Ferguson Home
3	1st FLOOR	KITCHEN	FLOORING		Optimax Performance	Bradford Honey	Natural	101337228	Floor & Decor
4	1st FLOOR	KITCHEN	CABINETS - KITCHEN		Hampton Bay	Avondale	White	TBD	Home Depot
4a	1st FLOOR	KITCHEN	CABINETS - KITCHEN		Custom Millwork	SEE LINK FOR CONCEPT	Natural wood/ wood look	TBD	Custom
5	1st FLOOR	KITCHEN	KNOB - CABINETS		Atlas	Malin	Black	A642-BRN	Ferguson Home
6	1st FLOOR	KITCHEN	COUNTERTOP		Cambria	Quartz - Seacourt	White variants	TBD	Home Depot
7	1st FLOOR	KITCHEN	SINK		Kohler	Billings	Black	K-33712-CM1	Ferguson Home
8	1st FLOOR	KITCHEN	FAUCET - SINK		Pfister	Montay Single Handle	Matte Black	GT-529-MTB	Ferguson Home
9	1st FLOOR	KITCHEN	RANGE		GE	30 in 4 burner element free	White	GRF400SVWW	Home Depot
9a	1st FLOOR	KITCHEN	RANGE	MICROWAVE	GE	profile 1.1 cu ft countertop	White	PCHK11S1WWW	Home Depot
10	1st FLOOR	KITCHEN	RANGE HOOD		ZLINE	30 in ducted vent range hood	White	KB4STX-WM-30	Home Depot
11	1st FLOOR	KITCHEN	DISHWASHER		GE	Profile 18" Built-In	White	PDT145SGLWW	Home Depot
12	1st FLOOR	KITCHEN	REFRIGERATOR		GE	19.2 cu ft Top Freezer Fridge	White	GIE18GTNRWW	Home Depot
13	1st FLOOR	KITCHEN	LIGHT FIXTURE	KITCHEN AREA	Visual Comfort & Co.	Astra 24" wide pendant	Black	DJP1281MBK	Ferguson Home
14	1st FLOOR	DINING	FLOORING		Optimax Performance	Bradford Honey	Natural	101337228	Floor & Decor
15	1st FLOOR	DINING	LIGHT FIXTURE	FIXTURE OVER DINING TABLE	Visual Comfort & Co.	Antonia Medium Linear Lantern	Aged Iron (Black)	CHC 2156AI	Ferguson Home
18	1st FLOOR	LIVING AREA	FLOORING		Optimax Performance	Bradford Honey	Natural /Honey	101337228	Floor & Decor
19	1st FLOOR	LIVING AREA	LIGHT FIXTURE	Ceiling Fan/Light	MinkaAire	Skinnie 56"	Coal	F626L-CL	Ferguson Home
23	1st FLOOR	LIVING AREA	SMOKE DETECTOR		Kidde	Hardwire Smoke + CO	White	21031529	Home Depot
24	1st FLOOR	BEDROOM 1	FLOORING		Optimax Performance	Bradford Honey	Natural/Honey	101337228	Floor & Decor
25	1st FLOOR	BEDROOM 1	LIGHT FIXTURE	Ceiling Fan/Light	MinkaAire	Skinnie 44"	Coal	F625L-CL	Ferguson Home
28	1st FLOOR	BEDROOM 1	SMOKE DETECTOR		Kidde	Hardwire Smoke + CO	White	21031529	Home Depot
29	1st FLOOR	BEDROOM 2	FLOORING		Optimax Performance	Bradford Honey	Natural/Honey	101337228	Floor & Decor
30	1st FLOOR	BEDROOM 1	LIGHT FIXTURE	Ceiling Fan/Light	MinkaAire	Skinnie 44"	Coal	F625L-CL	Ferguson Home
33	1st FLOOR	BEDROOM 2	SMOKE DETECTOR		Kidde	Hardwire Smoke + CO	White	21031529	Home Depot
34	1st FLOOR	BEDROOM 3	FLOORING		Optimax Performance	Bradford Honey	Natural/Honey	101337228	Floor & Decor
35	1st FLOOR	BEDROOM 1	LIGHT FIXTURE	Ceiling Fan/Light	MinkaAire	Skinnie 44"	Coal	F625L-CL	Ferguson Home
38	1st FLOOR	BEDROOM 3	SMOKE DETECTOR		Kidde	Hardwire Smoke + CO	White	21031529	Home Depot
39	1st FLOOR	BATH 1	CABINETS - VANITY			Pedestal or Concole Style	White/Brass		
40	1st FLOOR	BATH 1	SINK		Kingston Brass	Imperial	White	VPB4308	Ferguson Home
41	1st FLOOR	BATH 1	FAUCET - SINK		Signature Hardware	Lexia Widespread	Polished Brass	SHWSCLE808PB	Ferguson Home
42	1st FLOOR	BATH 1	TUB		Kohler	Irvine	White	K-26070-RA-0	Ferguson Home
43	1st FLOOR	BATH 1	FAUCET - TUB		Signature Hardware	Lexia Tub & Shower package	Polished Brass	SHLE8030GPB	Ferguson Home
44	1st FLOOR	BATH 1	SHOWER WALLS		Daltile	Restore 3x6 Subway Tile	Bright White	RE1536MODHD1P2	Home Depot
45	1st FLOOR	BATH 1	TOILET		Kohler	Memoirs Stately Comfort Height	White	K-3817-0	Ferguson Home
46	1st FLOOR	BATH 1	FLOORING - TILE		Daltile	Restore White Hex Mosaic	White w/ Grey Grout	RE151HEXHD1P2	Home Depot
47	1st FLOOR	BATH 1	LIGHT FIXTURE	Vanity Lighting (2)	Millenium Lighting	Adora 15"	Vintage Brass	16201-VB	Ferguson Home
48	1st FLOOR	BATH 1	MIRROR - VANITY		Pottery Barn	Vintage Rounded Rectangular Mirror	Antique Brass	6876932	Pottery Barn
49	1st FLOOR	BATH 1	EXHAUST FAN		Broan-Nutone	QT Series Quiet 120 CFM	White	QT130LE	Home Depot
50	1st FLOOR	BATH 2	CABINETS - VANITY			Pedestal or Concole Style	White/Brass		
51	1st FLOOR	BATH 2	SINK		Kingston Brass	Imperial	White	VPB4308	Ferguson Home
52	1st FLOOR	BATH 2	FAUCET - SINK		Signature Hardware	Lexia Widespread	Polished Brass	SHWSCLE808PB	Ferguson Home
53	1st FLOOR	BATH 2	SHOWER PAN		Kohler	Irvine	White	K-26070-RA-0	Ferguson Home
54	1st FLOOR	BATH 2	FAUCET - SHOWER		Signature Hardware	Shower package	Polished Brass	SHLE8020GPB	Ferguson Home
55	1st FLOOR	BATH 2	SHOWER WALLS		Daltile	Restore 3x6 Subway Tile	Bright White	RE1536MODHD1P2	Home Depot
55a	1st FLOOR	BATH 2	SHOWER GLASS		Glass Warehouse	Illume	Polished Brass	GW-WH-60-PB	Ferguson Home
56	1st FLOOR	BATH 2	TOILET		Kohler	Memoirs Stately Comfort Height	White	K-3817-0	Ferguson Home
57	1st FLOOR	BATH 2	FLOORING - TILE		Daltile	Restore White Hex Mosaic	White w/ Grey Grout	RE151HEXHD1P2	Home Depot
58	1st FLOOR	BATH 2	LIGHT FIXTURE	Vanity Lighting (2)	Millenium Lighting	Adora 15"	Vintage Brass	16201-VB	Ferguson Home
59	1st FLOOR	BATH 2	MIRROR - VANITY		Pottery Barn	Vintage Rounded Rectangular Mirror	Antique Brass	6876932	Pottery Barn
60	1st FLOOR	BATH 2	EXHAUST FAN		Broan-Nutone	QT Series Quiet 120 CFM	White	QT130LE	Home Depot

MARCO O'GRADY DESIGN

MARCOGRADY.COM
703.729.5124

ASHBURN, VA 20147
+
TRAVERSE CITY, MI 49684

ALGONKIAN CABIN RENOVATION

CABIN #7
46454 PARK CHALET PL
STERLING, VA 20165

CERTIFIED PROFESSIONAL BUILDING DESIGNER
NATIONAL COUNCIL OF BUILDING DESIGNER CERTIFICATION
MARC J. O'GRADY
47-167

DATE:	ISSUE:
06.19.26	CLIENT REVIEW
08.12.26	CLIENT REVIEW
08.13.26	FOR PERMIT

This is an original design and may not be used or copied under penalty of law. Drawings, specifications, and all other instruments of service are and shall remain the physical and intellectual property of MARC O'GRADY DESIGN whether the projects for which they are created are executed or not.

© 2025-2026 MARC O'GRADY DESIGN

A7

61	1st FLOOR	MECHANICAL ROOM	FLOORING	UTILITY CLOSET (HVAC + WH)	Optimax Performance	Optimax Performance (Bradford Hon	Natural/Honey	101337228	Floor & Decor
62	1st FLOOR	MECHANICAL ROOM	LIGHT FIXTURE	UTILITY CLOSET (HVAC + WH)	Nuvo	LED 2 foot with Motion Sensor	White	65/1214	Ferguson Home
63	INTERIOR	GENERAL	WALL	WALL MATERIAL	Alexandria Moulding	Vertical Shiplap/Tongue & Groove	White (Satin/Eggshell)	405NG	Home Depot
64	INTERIOR	GENERAL	DOOR STYLE	HOLLOW CORE OR SOLID?	ELD-WEN (Standard Home Depot sto	2-Panel Square Solid Core	Primed White	JELD-WEN	Home Depot
65	INTERIOR	GENERAL	KNOB - DOORS		Atlas Marlin Knob	Atlas Marlin Knob	Matte Black		Ferguson Home
66	INTERIOR	GENERAL	TRIM - INTERIOR	BASE, DOOR, WINDOW		1x4 Base & 1x3 Casing (Square edge)	White (Semi-Gloss)		Home Depot
67	INTERIOR	GENERAL	LIGHT SWITCHES			Lutron Diva Rocker Dimmer	White	DVCL-153P-WH	Home Depot
68	INTERIOR	GENERAL	OUTLETS		Leviton	Tamper-Resistant Decorator Outlet	White	R62-05325-2WS	Home Depot
69	INTERIOR	KITCHEN	LIGHT FIXTURE	up lighting in soffet space wired to switch	WAC	InvisiLED Pro	white	LED-T24W-5-WT	Ferguson Home
70	INTERIOR	BEDROOM 1	LIGHT FIXTURE	up lighting in soffet space wired to switch	WAC	InvisiLED Pro	white	LED-T24W-5-WT	Ferguson Home
71	INTERIOR	BEDROOM 2	LIGHT FIXTURE	up lighting in soffet space wired to switch	WAC	InvisiLED Pro	white	LED-T24W-5-WT	Ferguson Home
72	INTERIOR	BEDROOM 3	LIGHT FIXTURE	up lighting in soffet space wired to switch	WAC	InvisiLED Pro	white	LED-T24W-5-WT	Ferguson Home
73	EXTERIOR	GENERAL	WINDOWS	Contractor/Architect to Advise	Andersen or Equal				
74	EXTERIOR	ENTRY	DOORS - ENTRY	Contractor/Architect to Advise	Andersen or Equal				
75	EXTERIOR	LIVING AREA	DOORS - PATIO	Contractor/Architect to Advise	Andersen or Equal				
76	EXTERIOR	KITCHEN	DOORS - PATIO	Contractor/Architect to Advise	Andersen or Equal				
77	EXTERIOR	DECK - REAR	DECKING	Contractor/Architect to Advise	5/4" x 6 Pressure Treated				

MARCO'GRADY DESIGN

MARCOGRADY.COM
703.729.5124

ASHBURN, VA 20147
+
TRAVERSE CITY, MI 49684

ALGONKIAN CABIN RENOVATION

CABIN #7
46454 PARK CHALET PL
STERLING, VA 20165

CERTIFIED PROFESSIONAL BUILDING DESIGNER
NATIONAL COUNCIL OF BUILDING DESIGNER CERTIFICATION
MARC J. O'GRADY
67-167

DATE:	ISSUE:
06.19.26	CLIENT REVIEW
08.12.26	CLIENT REVIEW
08.13.26	FOR PERMIT

This is an original design and may not be used or copied under penalty of law. Drawings, specifications, and all other instruments of service are and shall remain the physical and intellectual property of MARC O'GRADY DESIGN whether the projects for which they are created are executed or not.

© 2025-2026 MARC O'GRADY DESIGN

A8

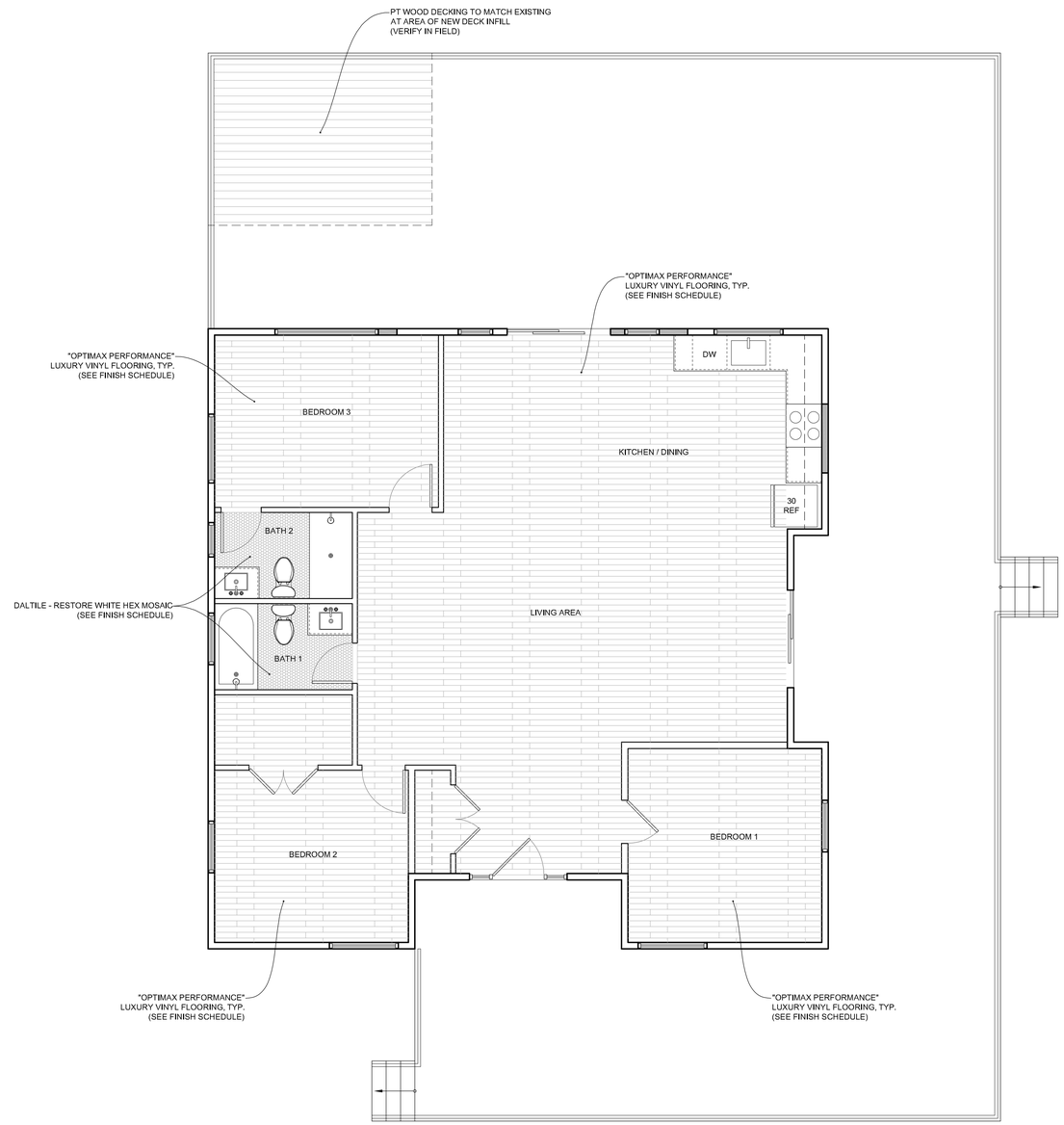

01
FINISH PLAN
1/4" = 1'-0"

MARCO O'GRADY DESIGN
MARCOGRADY.COM
703.729.5124
ASHBURN, VA 20147
+
TRAVERSE CITY, MI 49684

ALGONKIAN CABIN RENOVATION

CABIN #7
46454 PARK CHALET PL
STERLING, VA 20165

CERTIFIED PROFESSIONAL BUILDING DESIGNER
NATIONAL COUNCIL OF BUILDING DESIGNER CERTIFICATION
MARC J. O'GRADY
67-167

DATE:	ISSUE:
06.19.26	CLIENT REVIEW
08.12.26	CLIENT REVIEW
08.13.26	FOR PERMIT

This is an original design and may not be used or copied under penalty of law. Drawings, specifications, and all other instruments of service are and shall remain the physical and intellectual property of MARC O'GRADY DESIGN whether the projects for which they are created are executed or not.
© 2025-2026 MARC O'GRADY DESIGN

A9

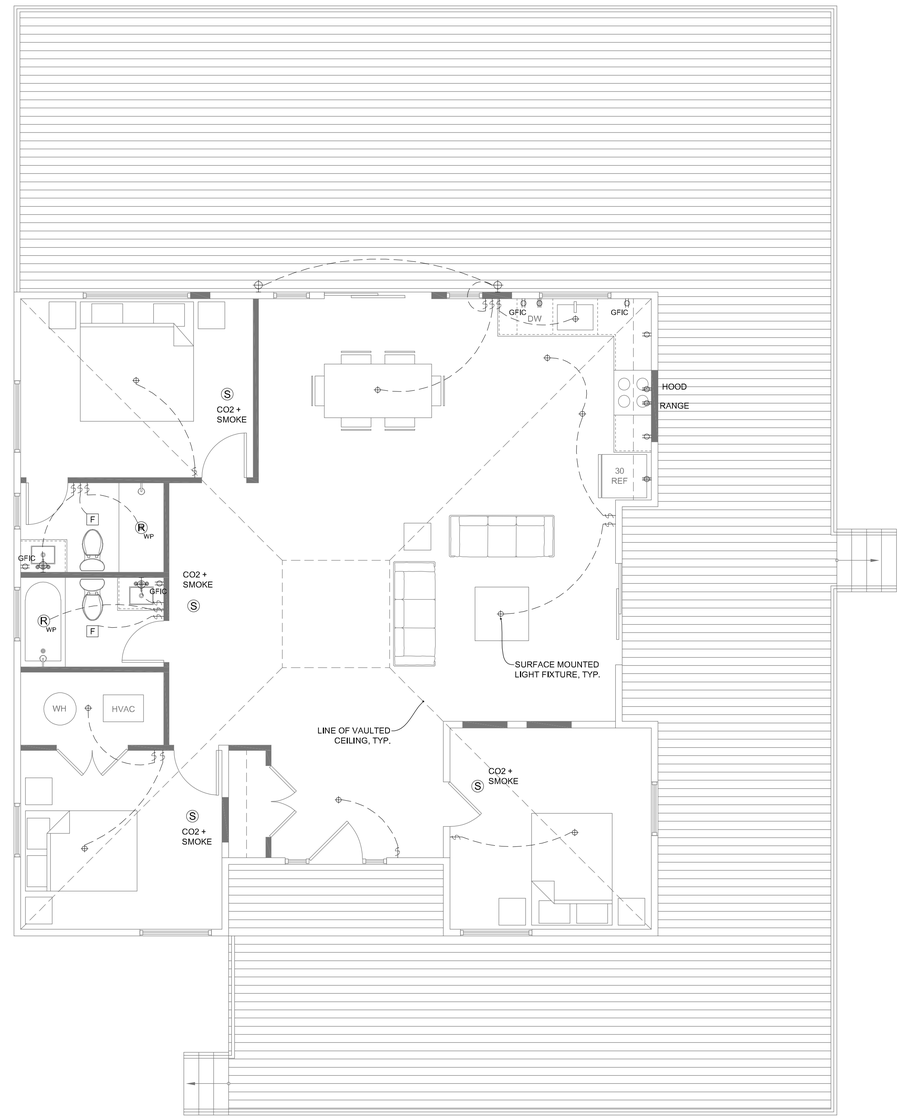

E1

FIRST FLOOR ELECTRICAL PLAN

1/4" = 1'-0"

ELECTRICAL NOTES:

1. PROVIDE MAKE-UP AIR FOR RANGE HOOD OVER 400 CFM

2. VENT BATHROOM EXHAUST FANS TO EXTERIOR

3. OUTLETS TO CODE

4. VERIFY LOCATION OF ALL LIGHTING AND SWITCHES WITH HOMEOWNER PRIOR TO INSTALLATION.

NOTE:
WHEN IN CONSTRUCTION PHASE VERIFY ALL LIGHTING/ELECTRICAL LOCATIONS PRIOR TO INSTALLATION. IF FIXTURES CAN NOT BE INSTALLED ACCORDING TO DRAWINGS, REVIEW NEW LOCATIONS WITH CONTRACTOR AND HOMEOWNER FOR FINAL APPROVAL.

ELECTRICAL SYMBOL KEY:

ALL ITEMS ARE CONTRACTOR PROVIDED UNLESS NOTED OTHERWISE

- SINGLE POLE SWITCH
- SINGLE POLE DIMMER SWITCH
- 3-WAY SWITCH
- STANDARD DUPLEX OUTLET
- GFIC — GROUND FAULT INTERUPTER CIRCUIT
- DEDICATED CIRCUIT
- R — 5" RECESSED LIGHT
- R WP — WATER-PROOF RECESSED LIGHT
- DIRECTIONAL RECESSED LIGHT
- SURFACE MOUNTED LIGHT FIXTURE
- WALL MOUNTED LIGHT FIXTURE
- CEILING FAN
- UNDERCABINET LIGHT
- INCANDESCENT LIGHT
- D — CAT-5 DATA OUTLET
- CABLE TV OUTLET
- TELEPHONE OUTLET
- F — EXHAUST FAN
- S — SMOKE DETECTOR: HARDWIRED, INTERCONNECTED + BATTERY BACK-UP
- D — GARBAGE DISPOSAL

MARCO O'GRADY DESIGN

MARCOGRADY.COM
703.729.5124

ASHBURN, VA 20147
+
TRAVERSE CITY, MI 49684

ALGONKIAN CABIN RENOVATION

CABIN #7
46454 PARK CHALET PL
STERLING, VA 20165

CERTIFIED PROFESSIONAL BUILDING DESIGNER
NATIONAL COUNCIL OF BUILDING STANDARDS CERTIFICATION
MARC J. O'GRADY
97-187

DATE	ISSUE
06.19.26	CLIENT REVIEW
08.12.26	CLIENT REVIEW
08.13.26	FOR PERMIT

This is an original design and may not be used or copied under penalty of law. Drawings, specifications, and all other instruments of service are and shall remain the physical and intellectual property of MARC O'GRADY DESIGN whether the projects for which they are created are executed or not.

© 2025-2026 MARC O'GRADY DESIGN

E1

STRUCTURAL NOTES

General Notes

1. All work and materials to comply with the requirements of the IRC 2021 Edition as amended by LOUDOUN COUNTY, VA.
2. Codes: the following design standards are applicable by reference:
   ACI 530-13/ASCE 5-99 Building Code Requirements for Masonry Structures.
   AITC - Timber Construction Manual - fifth Ed.
   ACI 318-14 Building Code Requirements for Reinforced Concrete
   AISC - Manuel of Steel Construction Ninth Ed.
3. Foundations: footings, underpinning and slab on grades are designed to bear on native soil with an allowable bearing pressure of 1500 psf A qualified soil-bearing inspector prior to placement of concrete shall verify all bearing values.
4. Structural:
   A. All structural steel, including detail material shall conform to ASTM A572 fY = 50ksi, U.N.O.
   B. All structural tubing shall conform to ASTM A500, grd. B
   C. All steel pipe shall be ASTM A53, type E or S, grade B.
   D. All welders shop and field, shall be certified. Use E70xx electrodes only.
   E. All steel exposed to weather and exterior masonry support shall receive one shop coat of corrision-inhibting primer.
   F. Detailing, fabrication and erection shall be in accordance with AISC.
   G. All exterior structural steel shall receive rust preventative paint.
   H. Connections; All beam connections shall be simple shear connections, U.N.O. Where no reaction is provided, the beam shall be assumed to carry 120% of the allowable uniform load in kips for beams laterally supported, as given in the AISC steel construction manual. Except as noted, all fasteners shall be 3/4" diameter ASTM A325 bolts, designed to act in bearing type connections with threads included.
5. Lumber:
   A. Lumber shall be SPF #2 with a min. Fb = 875psi Min. Fv = 135psi and min. E = 1,400,000psi.
   B. LVL and PSL shall have a min. Fb = 2850psi; Fv = 285psi; E = 2,000,000psi.
   C. Floor decking shall be 3/4" APA rated decking. Roof decking shall be 5/8" APA rated decking. Wall sheathing shall be 7/16" APA rated sheathing. Glue and nail roof and floor decking to joists and rafters.
   D. Provide double joists joist under all walls that run parallel to floor framing.
   E. Nail all multiple members together per the manufacturer's recommendations and at a minimum use 2-10d nails at 6" O.C. staggered. Glue all multiple studs together and stagger sides that nails are driven from.
   F. Provide bridging at center of all joist spans exceeding 8'-0" and at 1/3 points of all joist spans exceeding 16'-0".
   G. Provide solid blocking at all bearing points on top of walls or beams.
   H. Provide solid blocking below all wood posts.
   I. All posts shall have Simpson Cap an Base plates typ.
   J. All joists shall have Simpson Hangers where applicable.
   K. All lumber in contact with masonry or concrete or within 8" of soil shall be reassure treated. All lumber to conform to IRC R319 for protection against corrosion and termite damage.
   L. Wood lintels shall be as follows;
      Opening <3'-6" - 2-2x6
      3"-6" < opening <5'-6" - 2-2x8
      5'-6" < opening <7'-0" - 2-2x10
      Greater than 7'-0" - See plans
6. Fasteners:
   A. All prefabricated angles, bearing plates, and joist hangers shall be installed per the manufacturers recommendations.
   B. Epoxy Bolts shall be Simpson SET. Follow the manufacturers recommendations for setting epoxy bolts.
   C. Expansion bolts shall be rawl power studs.
7. Masonry:
   A. Masonry construction shall be in conformance with the applicable sections of aci 530-13/ASCE5-99, "Specifications for Masonry Structures."
   B. Concrete masonry units shall be hollow load bearing units (ASTM C90) grade n-1 with a net strength of 2000psi and F'm -1500psi.
   C. All joints to be filled solid with mortar.
   D. Mortar to comply with ASTM C270 (type M or S).
8. Cast in place concrete:
   A. Concrete construction shall be in conformance with the applicable sections of ACI 318-14, "Part 3 - Construction Requirements."
   B. Concrete shall have a minimum compressive strength at 28 days of 4,000psi, UNO (unless noted otherwise).
   C. All concrete shall be placed with a slump of 4" (± 1/2")
   D. All concrete shall be normal weight, UNO.
   E. Concrete cover for reinforcement shall be:
      Columns and beams 11/2"
      Slabs 3/4"
      Footings 3"
9. Reinforcement:
   A. Reinforcing bars shall be deformed bars conforming to ASTM A615, grade 60 (fy = 60ksi)
   B. Welded wire fabric (wwf) shall conform to ASTM a185. Lap edges of wire fabric at least 6" in each direction.
10. Dimensions: The contractor shall field verify all dimensions prior to fabrication of structural components.
11. Coordination: The contractor shall coordinate all sleeves, duct openings and holes between trades. Any conduits or pipes embedded in concrete must be in accordance with ACI 318-95, chapter 6. Where sleeves are closely spaced in a group, the group shall be treated as an opening and reinforced accordingly. Submit drawings showing all opening sizes and locations for the approval by the structural engineer.

LOADS:

LIVE LOADS

FLOOR:	40PSF
DECK:	40PSF
BEDROOM	30PSF
ROOF:	30PSF
ATTIC:	20PSF
BALCONY:	60PSF

WIND LOADS

BASIC WIND SPEED:	90 MPH
WIND LOAD IMPORTANCE FACTOR:	1.0
WIND EXPOSURE FACTOR:	B

SNOW LOADS:

GROUND SNOW LOAD (PG):	30PSF

SEISMIC DESIGN DATA

SEISMIC DESIGN CATEGORY:	B

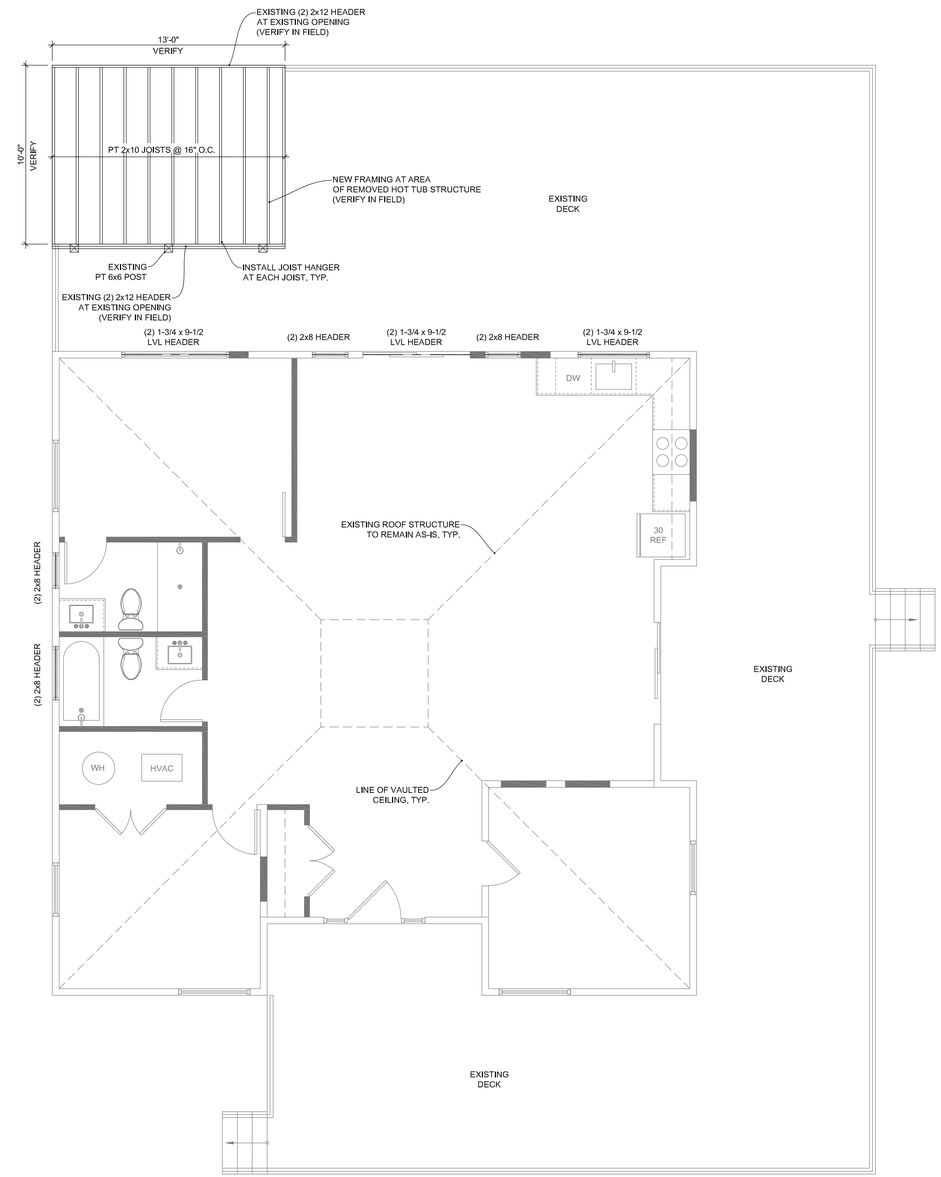

01
FRAMING PLAN
1/4" = 1'-0"

GENERAL NOTES:

- ON-SITE VERIFICATION OF ALL DIMENSIONS AND CONDITIONS SHALL BE THE RESPONSIBILITY OF THE GENERAL CONTRACTOR AND HIS/HER SUBCONTRACTORS.
- NOTED DIMENSIONS TAKE PRECEDENCE OVER SCALE. DO NOT SCALE DRAWINGS.
- THE GENERAL NOTES AND TYPICAL DETAILS APPLY THROUGHOUT THE JOB UNLESS OTHERWISE NOTED OR SHOWN.
- DISCREPANCIES: THE CONTRACTOR SHALL COMPARE AND COORDINATE ALL DRAWINGS; WHEN IN THE OPINION OF THE CONTRACTOR, A DISCREPANCY EXISTS HE/SHE SHALL PROMPTLY REPORT IT TO THE ARCHITECT AND/OR DESIGNER FOR PROPER ADJUSTMENT BEFORE PROCEEDING WITH THE WORK.

MARCO'GRADY DESIGN
MARCOGRADY.COM
703.729.5124
ASHBURN, VA 20147
+
TRAVERSE CITY, MI 49684

ALGONKIAN CABIN RENOVATION

CABIN #7
46454 PARK CHALET PL
STERLING, VA 20165

CERTIFIED PROFESSIONAL BUILDING DESIGNER
NATIONAL COUNCIL OF BUILDING DESIGNER CERTIFICATION
MARC J. O'GRADY
47-167

COMMONWEALTH OF VIRGINIA
ISMAIL FUAD HANIEH
Lic. No. 29424
PROFESSIONAL ENGINEER
August 13, 2026

DATE	ISSUE
06.19.26	CLIENT REVIEW
08.12.26	CLIENT REVIEW
08.13.26	FOR PERMIT

This is an original design and may not be used or copied under penalty of law. Drawings, specifications, and all other instruments of service are and shall remain the physical and intellectual property of MARC O'GRADY DESIGN whether the projects for which they are created are executed or not.
© 2025-2026 MARC O'GRADY DESIGN

S1

Virginia Practical Wall Bracing Worksheet

per 2018 Virginia Residential Code R602.12

Ultimate Wind Speed (mph)		115 (90)							
Rectangle Size (ft)		Front/Rear:	36	Left/Right:	36	Aspect Ratio:	PASS		
Rectangle Side		Front		Rear		Left		Right	
Number of Floors Above		0		0		0		0	
Eave-to-Ridge Height (ft)		5.5		5.5		5.5		5.5	
Exterior BWP Material		Wood Structural Panels		Wood Structural Panels		Wood Structural Panels		Wood Structural Panels	
Tabular Requirement (ft)		5.60		5.60		5.60		5.60	
Adjustments	Exposure	B	1.00	B	1.00	B	1.00	B	1.00
	Wall Ht. (ft)	8.00	0.90	8.00	0.90	8.00	0.90	8.00	0.90
	Omit Interior Finish?	No	1.00	No	1.00	No	1.00	No	1.00
	Fasteners @ 4" o.c.?	No	1.00	No	1.00	No	1.00	No	1.00
Required BWP Length (ft)		5.04		5.04		5.04		5.04	
Required BWP Length from Common Rectangle Side									
Total Required BWP Length (ft)		5.04		5.04		5.04		5.04	
Actual BWPs	Contributing Length (ft) CS-PF=1.5xactual PFG=1.5xactual PFH=4' ABW=4' — BWP	Location	Length	Location	Length	Location	Length	Location	Length
	1	Exterior	7.00	Exterior	3.75	Exterior	5.00	Exterior	12.00
	2	Exterior	3.00	Exterior	4.50	Exterior	2.25	Exterior	3.00
	3	Exterior	3.00	Exterior	3.00	Exterior	3.25	Exterior	3.00
	4	Exterior	7.00	Exterior	2.50	Exterior	9.00	Exterior	3.25
	5					Exterior	4.50	Exterior	5.50
	6								
	7								
Actual BWP Length (ft)		20.00		13.75		24.00		26.75	
Actual ≥ Required?		Pass		Pass		Pass		Pass	
BWPs ≤ 20' Apart?		Yes		Yes		Yes		Yes	
BWP within 12' of Corners?		Yes		Yes		Yes		Yes	
Compliant Number of BWPs		Yes		Yes		Yes		Yes	
BWL Compliance		Pass		Pass		Pass		Pass	

To report an error or bug, call 703-324-1842, TTY 711

A Fairfax County, Virginia Publication

Practial VRC2018 - 8/6/2021

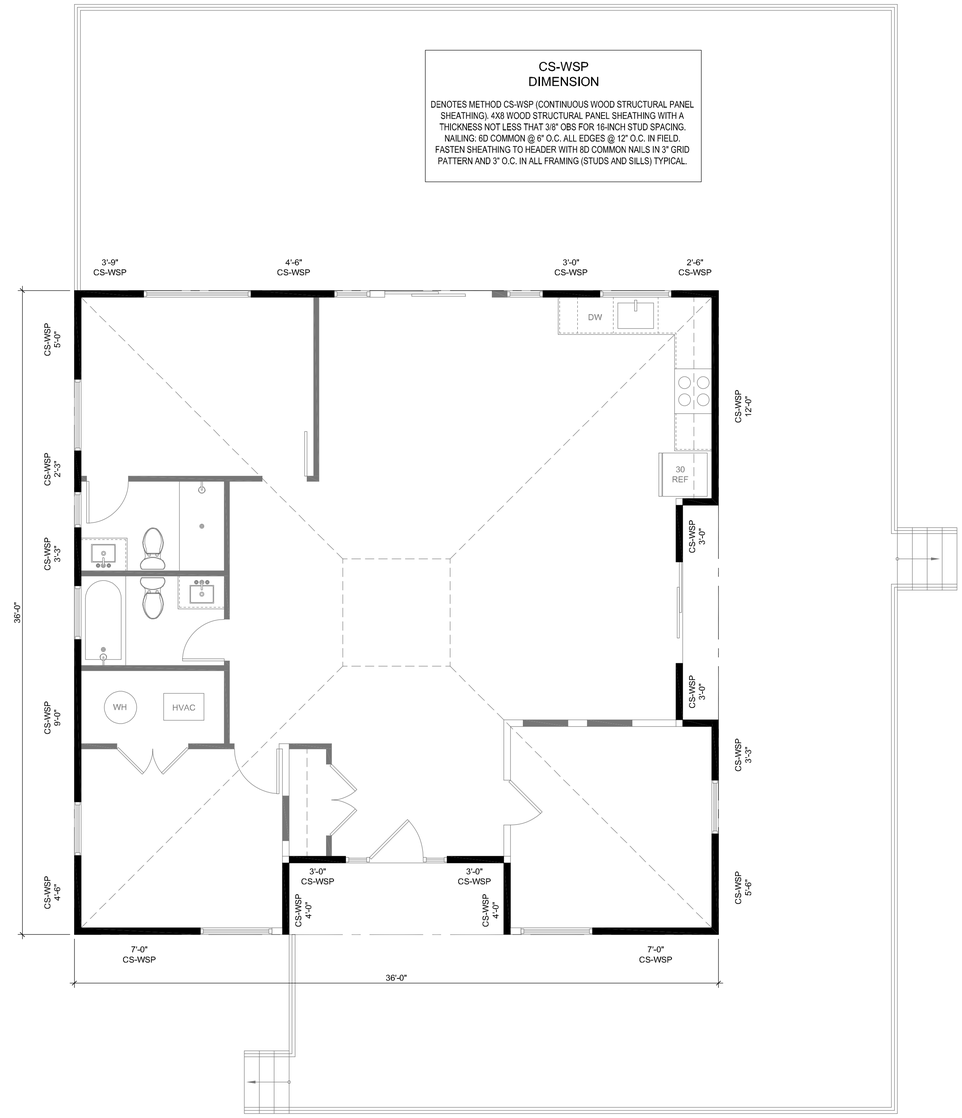

WB1

WALL BRACING PLAN

1/4" = 1'-0"

GENERAL NOTES:

- ON-SITE VERIFICATION OF ALL DIMENSIONS AND CONDITIONS SHALL BE THE RESPONSIBILITY OF THE GENERAL CONTRACTOR AND HIS/HER SUBCONTRACTORS.
- NOTED DIMENSIONS TAKE PRECEDENCE OVER SCALE. DO NOT SCALE DRAWINGS.
- THE GENERAL NOTES AND TYPICAL DETAILS APPLY THROUGHOUT THE JOB UNLESS OTHERWISE NOTED OR SHOWN.
- DISCREPANCIES: THE CONTRACTOR SHALL COMPARE AND COORDINATE ALL DRAWINGS; WHEN IN THE OPINION OF THE CONTRACTOR, A DISCREPANCY EXISTS HE/SHE SHALL PROMPTLY REPORT IT TO THE ARCHITECT AND/OR DESIGNER FOR PROPER ADJUSTMENT BEFORE PROCEEDING WITH THE WORK.

MARCO'GRADY DESIGN

MARCOGRADY.COM
703.729.5124

ASHBURN, VA 20147
+
TRAVERSE CITY, MI 49684

ALGONKIAN CABIN RENOVATION

CABIN #7
46454 PARK CHALET PL
STERLING, VA 20165

CERTIFIED PROFESSIONAL BUILDING DESIGNER
NATIONAL COUNCIL OF BUILDING DESIGNER CERTIFICATION
MARC J. O'GRADY
47-167

COMMONWEALTH OF VIRGINIA
ISMAIL FUAD HANIEH
Lic. No. 29424
PROFESSIONAL ENGINEER
August 13, 2026

DATE	ISSUE
06.19.26	CLIENT REVIEW
08.12.26	CLIENT REVIEW
08.13.26	FOR PERMIT

This is an original design and may not be used or copied under penalty of law. Drawings, specifications, and all other instruments of service are and shall remain the physical and intellectual property of MARC O'GRADY DESIGN whether the projects for which they are created are executed or not.

© 2025-2026 MARC O'GRADY DESIGN

S2

NOTE:
ALL ELECTRICAL DEVICES AND FIXTURES IN ALL LIVING QUARTERS TO BE PROTECTED WITH A.F.I. BREAKER

SMOKE DETECTOR'S POWERED BY HOUSE ELECTRIC W/ BATTERY BACKUP & INTERCONNECTED. INSTALLED IN EACH SLEEPING ROOM & IN HALL OR AREA IMMEDIATELY OUTSIDE EACH ROOM & AT HIGHEST POINT OF EACH STORY OF RESIDENCE.

NOTE:
CARBON MONOXIDE PROTECTION SHALL BE PROVIDED WITHIN 10 FEET OF EACH ROOM USED FOR SLEEPING PURPOSES PER REQUIREMENTS DESCRIBED IN THE STATE STATUTES 9B-3.0472.

ELECTRICAL LEGEND

	CEILING FAN
	24" X 48" FLOR. FIX.
	12" X 48" FLOUR. FIXTURE
	FLOR. STRIP
	UNDERCOUNTER LIGHT
	BASE CABINET FOOT LIGHTING
	BAR/SCONC LIGHTING
	ROPE LIGHTING
	H-99 RECESS
	EYE BALL RECESSED
R 4" WP	WATER-PROOF 4" RECESSED LIGHT
R	6" RECESS LIGHTING
	SURFACE MOUNTED LIGHT FIXTURE
	HANGINGLIGHT FIXTURE
	WALL SCONCE LIGHTING
	WALL MOUNTED LIGHT FIXTURE
	SPOT LIGHTS
	PENDANT LIGHT
	EXHAUST FAN W/ LIGHT
EF	EXHAUST FAN
	TYP. SWITCH
D	DIMMER SWITCH
3	3-WAY SWITCH
4	4-WAY SWITCH
	SINGLE 110 OUTLET
	UNDER COUNTER 110 OUTLET
	110 OUTLET
	HALF HOT DUPLEX 110 OUTLET
	220 OUTLET
W.P. G.F.I.	11O G.F.I.
W.P. G.F.I.	110 G.F.I. W.P. OUTLET
	A/C DISCONNECT
	PUSH BUTTON
	CABLE T.V.
	PHONE
S.D.	SMOKE DETECTOR
	DOOR CHIME
J	JUNCTION BOX
SW	STRUCTURED WIRE (2 COAX-2 CAT6)
CO	CARBON MONXIDE DETECTOR
DM	DUAL MEDIA OUTLET (DATA; PH; TV; ELEC.)
	SPECIAL PURPOSES RECEPT.
	ELECTRICAL PANEL

KEYNOTES

1. MOUNT RECEPTACLE WITHIN 12" OF COUNTERTOP.
2. MOUNT DEVICE HORIZONTALLY IN COUNTER BACKSPLASH. COORDINATE EXACT MOUNTING HEIGHT WITH ARCHITECT PRIOR TO ROUGH-IN.
3. WALL MOUNTED OUTLET FOR WATER HEATER RECIRC PUMP. COORDINATE EXACT LOCATION WITH SUPPLIER/INSTALLER.
4. PROVIDE DISCONNECT FOR WATER HEATER. COORDINATE EXACT LOCATION WITH SUPPLIER/INSTALLER
5. WALL MOUNTED WASHING MACHINE OUTLET. COORDINATE LOCATION AND REQUIREMENTS WITH SUPPLIER/INSTALLER.
6. WALL MOUNTED DRYER MACHINE OUTLET. COORDINATE LOCATION AND REQUIREMENTS WITH SUPPLIER/INSTALLER.
7. GARBAGE DISPOSAL OUTLET MOUNTED UNDER SINK, CONTROLLED BY SWITCH ON. COORDINATE LOCATION AND REQUIREMENTS WITH SUPPLIER/INSTALLER
8. WALL MOUNTED DISHWASHER OUTLET. COORDINATE LOCATION AND REQUIREMENTS WITH SUPPLIER/INSTALLER.
9. WALL MOUNTED REFRIGERATOR/FREEZER OUTLET. COORDINATE LOCATION AND REQUIREMENTS WITH SUPPLIER/INSTALLER.
10. JUNCTION BOX FOR HOOD. COORDINATE LOCATION AND REQUIREMENTS WITH SUPPLIER/INSTALLER.
11. JUNCTION BOX FOR GAS APPLIANCE. COORDINATE LOCATION AND REQUIREMENTS WITH SUPPLIER/INSTALLER
12. 120V JUNCTION BOX FOR IGNITION CIRCUIT.
13. WALL MOUNTED UNDERCOUNTER REFRIGERATOR OUTLET TO BE MOUNTED IN AN ACCESSIBLE LOCATION. COORDINATE LOCATION AND REQUIREMENTS WITH SUPPLIER/INSTALLER.
14. ELECTRICAL CONTRACTOR TO PROVIDE (1) LIGHT, (1)SWITCH AND (1) RECEPT. BY ATTIC ACCESS USING THE LOCAL CIRCUIT
15. WALL MOUNTED ICE MACHINE OUTLET TO BE MOUNTED IN AN ACCESSIBLE LOCATION. COORDINATE LOCATION AND REQUIREMENTS WITH SUPPLIER/INSTALLER.
16. MOUNT DEVICE(S) ABOVE FIRE PLACE. COORDINATE MOUNTING HEIGHT WITH ARCHITECT PRIOR TO ROUGH-IN
17. WALL MOUNTED ICE MACHINE OUTLET TO BE MOUNTED IN AN ACCESSIBLE LOCATION. COORDINATE LOCATION AND REQUIREMENTS WITH SUPPLIER/INSTALLER
18. RECESSED FLOOR BOX SUITABLE FOR CONCRETE FLOORS WITH DEVICES AS SHOWN. COORDINATE EXACT LOCATION AND REQUIREMENTS WITH OWNER. PROVIDE ACCESSORIES AS REQUIRED. SHALL BE HUBBELL CFB2G SERIES WITH ROUND BRUSHED ALUMINUM COVER OR APPROVED EQUIVALENT. COORDINATE COVER AND FINISHES WITH ARCHITECT/OWNER PRIOR TO ROUGH-IN.
19. CEILING MOUNTED OUTLET FOR GARAGE OPENER. COORDINATE EXACT LOCATION WITH SUPPLIER/INSTALLER.
20. PROVIDE JUNCTION BOX FOR MOTORIZED SHADES. VERIFY AND COORDINATE EXACT LOCATIONS AND REQUIREMENTS WITH SYSTEM SUPPLIER/INSTALLER
21. PROVIDE JUNCTION BOX FOR MOTORIZED SCREENS. VERIFY AND COORDINATE EXACT LOCATIONS AND REQUIREMENTS WITH SYSTEM SUPPLIER/INSTALLER
22. PROVIDE JUNCTION BOX FOR MOTORIZED SHUTTERS. VERIFY AND COORDINATE EXACT LOCATIONS AND REQUIREMENTS WITH SYSTEM SUPPLIER/INSTALLER.
23. WALL MOUNTED GENERATOR OPEN STOP SWITCH.
24. WALL MOUNTED GENERATOR REMOTE ANNUNCIATOR.

SOME KEYNOTES MAY NOT BE USED ON THIS PLAN

PANEL A

VOLTAGE (L-N):	120	ENCLOSURE TYPE:	NEMA 1
VOLTAGE (L-L):	240	MOUNTING:	SURFACE
PHASES, WIRES:	1 ϕ, 3 W	AIC RATING:	22000
MINIMUM BUS CAPACITY (A):	200 A	NOTES:	NEW MLO
MAIN O.C. DEVICE (A):	200 A		

CKT NO	DESCRIPTION	TRIP AMPS	POLE	PHASE LOADS (VA) A		PHASE LOADS (VA) B		POLE	TRIIP AMPS	DESCRIPTION	CKT NO
1	EXTERIOR	20	1	0	0			1	20	BEDROOM 3	2
3	BATH 2	20	1			0	0	1	20	BATH 1	4
5	BEDROOM 2	20	1	0	0			1	20	ENTRY	6
7	BEDROOM 1	20	1			0	0	1	20	LIVING AREA	8
9	KITCHEN/DINING	20	1	0	1500			1	20	SMALL APPLIANCE 1	10
11	SMALL APPLIANCE 2	20	1			1500	1200	1	20	DISHWASHER	12
13	DISPOSAL	20	1	828	1200			1	20	MICROWAVE	14
15	REFRIGERATOR	20	1			1400	400	1	20	R/HOOD	16
17	SPARE	20	1	0	0			1	20	SPARE	18
19	SPARE	20	1			0	0	1	20	SPARE	20
21	SPARE	20	1	0	0			1	20	SPARE	22
23,25	RANGE	50	2			3800	2800	2	30	CU	24,26
23,25	RANGE	50	2	3800	2800			2	30	CU	24,26
27,29	AHU	50	2			4750	2250	2	30	WATER HEATER	28,30
27,29	AHU	50	2	4750	2250			2	30	WATER HEATER	28,30
31,33	SPARE	20	2			0	0	2	20	SPARE	32,34
31,33	SPARE	20	2	0	0			2	20	SPARE	32,34
35,37	SPARE	20	2			0	0	2	20	SPARE	36,38
35,37	SPARE	20	2	0	0			2	20	SPARE	36,38
39,41	SPARE	20	2			0	0	2	20	SPARE	40,42
39,41	SPARE	20	2	0	0			2	20	SPARE	40,42

Residential Optional Calculation

Version 2011 L

FLORIDA ENGINEERING LLC
4161 TAMIAMI TRAIL, UNIT 101
PORT CHARLOTTE, FL, 33990
phone: (941) 391-5980

STEP 1 Article 220.82 (B) (1),(2)

sq. ft	1224	General Lighting load	3,672 VA
	2	Small Appliance	3,000 VA
		Laundry circuit	VA
		Gen.Lgt, Sm App.& Laun. Load	6,672 VA

STEP 2 Article 220.82 (C)

Heat Pump w/ Concurrent Supplementary Heating

				QTY
3 ton	5,600 VA	AHU 1	8. kW	1
HP #2	VA	AHU 2	Select	Qty
HP #3	VA	AHU 3	Select	Qty
HP #4	VA	AHU 4	Select	Qty
HP #5	VA	AHU 5	Select	Qty

9,500 VA	
VA	
VA	
VA	
VA	

Total 1
Heating Load 12,335 VA
HP Load 7,200 VA

STEP 3 Article 220.82 (B) (3)

4,500 VA	1	Water Heater	4,500 VA
1,400 VA	1	Refrigerator	1,400 VA
600 VA		Freezer	VA
1,200 VA	1	Dishwasher	1,200 VA
828 VA	1	Disposal	828 VA
400 VA	1	R / Hood	400 VA
1,200 VA	1	Microwave	1,200 VA
4,000 VA		Microwave	VA
340 VA		Mini Refrig	VA
400 VA		Wine Clr	VA
5,000 VA		Insta Hot	VA
1,500 VA		Ironing Center	VA
	select	Jacuzzi Tub	VA
	select	Sprinkler Pump	VA
	select	Well Pump	VA
	sele	Fountain Pump	VA
	selec	Elevator	VA
		Pool Equip. Panel	VA Apply Demand
		GATES	VA No Demand
		Other load	VA No Demand

General lighting, Sm. Appl. & Laundry	6,672 VA
Electric Space Heat @ 65% <4, 40% >3, vs. A/C @ 100%	12,335 VA
Appliance Demand Load	9,528 VA
Dryer Demand Load	VA
Range Demand Load	7,600 VA
Service Demand	27,855 VA
Demand Load	116 A
Neutral Demand	57 A
Min.Service Req.	125 A
Min. Feeder size	2
Min. Neutral size	6
Eq. Grding Cond.	6 Copper
Total Appliance Load	9,528 VA

STEP 4 Article 220.82 (B) (3)

Electric Clothes Dryers VA

STEP 5 Article 220.82 (B) (3)

Electric Ranges 7,600 W Col C demand 7600
or Number of appliances

Check Box for Gas Range

Cooktop Col B demand
Cooktop Col B demand
Oven(s) Col B demand
Oven(s) Col B demand
Number of appliances 0 Dem. Factor
Cooktop & Oven Demand Load

>>>

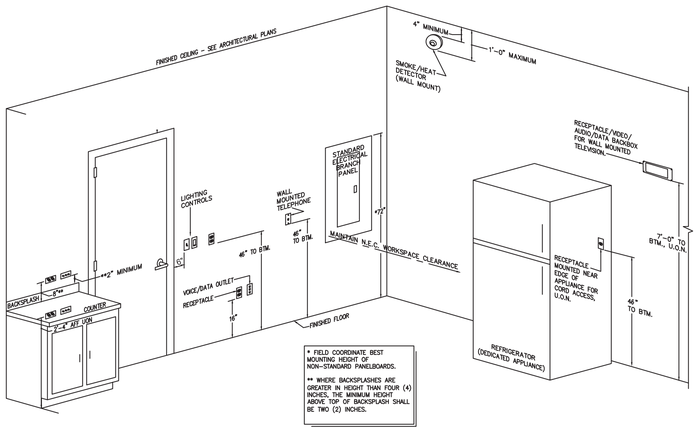

* FIELD COORDINATE BEST MOUNTING HEIGHT OF NON-STANDARD PANELBOARDS.

** WHERE BACKSPLASHES ARE GREATER IN HEIGHT THAN FOUR (4) INCHES, THE MINIMUM HEIGHT ABOVE TOP OF BACKSPLASH SHALL BE TWO (2) INCHES.

TYPICAL DEVICE INSTALLATION REQUIREMENTS

NO SCALE

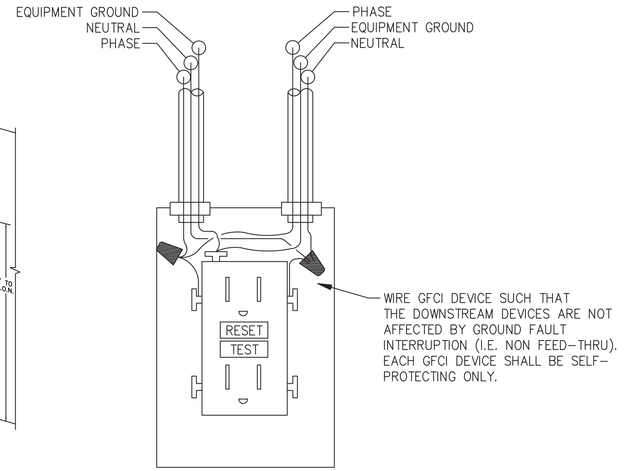

GFCI RECEPTACLE DETAIL

SCALE: NONE

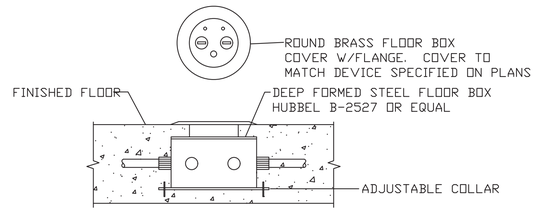

IN-FLOOR JUNCTION/OUTLET BOX DETAIL

NOT TO SCALE

PER N.E.C. 406.9(B), FURNISH AND INSTALL ALL EXTERIOR AND GARAGE RECEPTACLES WITH A EXTRA-DUTY GRADE "WHILE IN USE" WET LOCATION COVER. THE COVER SHALL BE U.L. 514D LISTED. EQUAL TO TAYMAC #MX3200 FOR SINGLE GANG G.F.C.I. RECEPTACLE. COVER INCLUDE GASKETS AND HARDWARE FOR A COMPLETE INSTALLATION. COVER SHALL BE METALLIC.

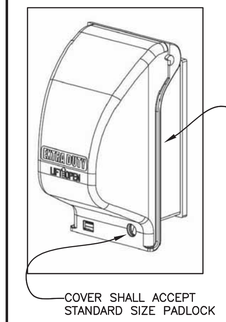

EXTERIOR RECEPTACLES COVER

NO SCALE

CONTRACTOR MUST VERIFY ALL CLEARANCES AND DIMENSIONS IN FIELD

ONE LINE CODED NOTES:

(1) 3#3/0 CU + #6 CU GND. - 2"C

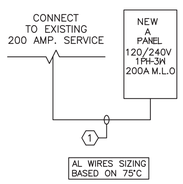

ALL THE DESIGN AND DETAILS ON THIS PLAN ARE THE PROPERTY OF LIGHTNING ENGINEERING AND SHALL NOT BE USED, COPIED OR REPRODUCED WITHOUT THE WRITTEN PERMISSION OF LIGHTNING ENGINEERING.

I HEREBY CERTIFY AS THE BUILDING DESIGN ENGINEER OF RECORD, THAT THE BUILDING DESIGN AS SHOWN ON THESE PLAN AND AS ACCOMPANIED BY DESIGN & SUPPORT CERTIFICATION DOES NOT CONFORM TO THE CODES. THIS CERTIFICATION DOES NOT INCLUDE ROOF TRUSS COMPONENTS OF WHICH THE TRUSS DESIGN ENGINEER IS THE ENGINEER OF RECORD. THE TRUSS DESIGN PLANS WILL BE REVIEWED FOR COMPLIANCE WITH THE BUILDING CODE WITH SUPPLEMENTS.

LIGHTNING ENGINEERING
4161 TAMIAMI TRAIL UNIT 101.
PORT CHARLOTTE, FL 33980
PH: 941-639-5505
FAX: 941-979-8195

PROJECT NAME & ADDRESS:

NOVA PARKS

46442 PARK CHALET PL, STERLING, VIRGINIA, 20165

MARC O'GRADY DESIGN

No.	Description	Date
1		
2		
3		
4		
5		

DRAWN BY: PLC

REVISED BY: JPP

PROJECT NO: 26 173 78

SHEET TITLE:

ELECTRICAL DETAILS

SHEET NUMBER:

ED-100

ELECTRICAL GENERAL PROVISIONS

PART 1 - GENERAL

A. General Conditions and Requirements:

This work is subject to the general conditions and requirements specified herein. The following codes and regulations (latest edition) govern the scope and installation of electrical work unless more stringent requirements are indicated in the drawings or specified:

2020 NEC, IBC 2021
National Fire Protection Association Standards (latest edition)
Underwriters Laboratories, Inc. (UL)
National Electrical Manufacturers Association (NEMA)
Applicable local and state building codes
ASHRAE Standards 90.1
VIRGINIA BUILDING CODE - RESIDENTIAL 2021.
VIRGINIA BUILDING CODE - EXISTING BUILDING 2021.
VIRGINIA BUILDING CODE - BUILDING 2021.
VIRGINIA BUILDING CODE - ENERGY CONSERVATION 2021.

B. Scope:

This division covers all labor, equipment, supervision, appliances, materials, and operations necessary to complete the electrical work per these specifications, drawings, and contract documents.

Work shall include labor, materials, permits, inspections, re-inspection fees, tools, equipment, transportation, insurance, temporary protection, lighting, supervision, and incidental items necessary for proper installation and operation.

C. Substitutions/Approved Equal:

Use only UL-labeled products where applicable. All materials must be new and in perfect condition. Any reference to specific brands or catalog numbers establishes a standard of quality; contractors may propose equal.

D. Fees, Permits, and Regulations:

Comply with all governing codes, ordinances, and regulations of city, county, and state authorities. Where local codes are not applicable, adhere to the latest NEC requirements.

E. Contractor's Responsibilities:

Coordinate work with other trades and utility companies.

Ensure timely work schedules and material delivery.

Employ qualified contractors and install materials and equipment in a neat condition.

Maintain the integrity of fire-rated partitions, ensuring compliance with fire-stopping requirements as per IBC.

Contractor is responsible for identifying all underground utilities before excavation. and coordinate with power utilities for service connections. The er s drawings shall be used as guide.

Electrical contractor shall provide appropriate conductors per NEC requirements.

If existing conditions are present, the contractor shall conduct a site visit to inspect the existing service and electrical conditions, ensuring they align with the electrical plans. Any discrepancies must be reported to the architect/owner before submitting a bid.

F. Interpretation of Drawings:

Drawings are diagrammatic and do not indicate exact conduit runs, outlet box locations, junction boxes, etc. Location on the drawings are approximate only.

Report any discrepancies before proceeding with related work. If a conflict arises between the contract documents and any applicable code or standard, the most stringent requirement shall be applied to this project.

Verify all figures and measurements prior to layout and shall be responsible for any errors that could have been avoided. Special attention must be given to code-required electrical clearances, and any discrepancies must be reported to the architect/owner immediately.

G. Service and Metering:

Coordinate with the utility company for service arrangements.

H. Cutting and Patching:

Coordinate all openings with the other trades. Unauthorized structural modifications must be approved by the architect/owner.

I. Handling of Materials and Equipment:

Protect materials from damage, moisture, dirt, and debris.
Replace any damaged materials to the satisfaction of the architect/owner.
Receive, store, handle, and deliver materials and equipment to the designated location.

J. Cleanup:

Maintain a clean worksite.

Remove debris and leave premises in an orderly condition.

Remove dirt, dust, paint, stains, and soil marks from all materials and equipment.

K. Labels:

Provide engraved rigid laminated phenolic labels for all equipment, disconnects, switches, electrical panels, etc.

L. As-Built Drawings:

Maintain accurate records of all changes from original plans and provide updated marked drawings upon project completion indicating all changes made.

M. Guarantee and Service:

The contractor shall guarantee equipment, materials, and workmanship.

N. Submittals:

Submit equipment confirmation and shop drawings per project schedule to the building department on the contract documents review process.

O. Inspections:

The Bldg. department inspector will inspect work for compliance with plans and specifications.

P. Interruption of Existing Service:

Provide advance notice before outages affecting critical circuits.

Q. Final Inspection and Tests:

Complete all work, testing of all systems, provide results and corrective actions before final inspection.

ELECTRICAL WORK

PART 1 - PRODUCTS

A. CONDUIT:

Unless otherwise specified, conduit shall be installed as follows:

Plastic Conduit: Provided by one of the following manufacturers (or an approved equivalent): Carlon Plastic Products Corp., Cantex Plastic Products, Hatfield Wire and Cable Company.

Conduits that are exposed and susceptible to mechanical damage shall be rigid, heavy-wall or galvanized steel.

Conduits exposed outdoors or embedded in floor slabs shall be rigid, heavy-wall, galvanized, or sherardized steel, or Schedule 80 PVC.

Conduits installed below grade and outside the building shall be Schedule 40 heavy-wall, high-impact polyvinyl chloride (PVC) electrical conduit.

B. COUPLINGS AND CONNECTORS:

Couplings and connectors shall be manufactured by one of the following (or an approv Appleton Electric Company, Raco, Steel City

C. OUTLET BOXES:

All 125v single phase equipment receptacles to be gfci protected on gfci breaker circuit

Floor Box: Hubbell #8-2536 with S-3182 brass carpet flange and S-3925 flap-type cover for duplex receptacles (or an approved equivalent).

D. PANELBOARDS:

Panelboards shall be from one of the following manufacturers (or an approve Eaton, Square D, General Electric, or Siemens.

All Panelboards must match project specifications.

All panels shall be UL listed and match the project specifications.

E. WIRE:

Furnish and install conductors as specified in the drawings. All conductors shall be copper rated for 600 volts

Wires larger than #10 to be stranded in accordance with ASTM.

All wiring conductors shall be insulated electrical grade annealed copper or ROMEX.

F. WIRING DEVICES:

Smoke detectors:

Shall be hard wired (110 volt) to a non-switchable kitchen or bathroom lighting circuit and shall not be connected on to the load side of a ground fault interrupter. Powered by house electric with battery backup and interconnected. Installed in each sleeping room and hall or area immediately outside each room and at the highest point of each story of residence.

Carbon monoxide:

Shall be provided within 10 feet of each room used for sleeping purposes per requirements described in the state statues 9B-3.0472

Receptacles:

All 125v single phase equipment receptacles to be gfci protected on gfci breaker circuit

406.12 tamper-resistant receptacles
in all areas specified in 210.52, all nonlocking-type 125-volt, 15- and 20-ampere receptacles shall be listed tamper-resistant receptacles.

210.8(a) dwelling units. all 125-volt, single-phase, 15- and 20- ampere receptacles installed in the locations specified in 210.8(a)(1) through (10) shall have ground-fault circuit interrupter protection for personnel.
- *bathrooms*
- *garages, and also accessory buildings that have a floor located at or below grade level not intended as habitable rooms and limited to storage areas, work areas, and areas of similar use*
- *outdoors. exception: receptacles that are not readily accessible and are supplied by a branch circuit dedicated to electric snow-melting, deicing, or pipeline and vessel heating equipment shall be permitted to be installed in accordance with 426.28 or 427.22, as applicable.*
- *crawl spaces — at or below grade level*
- *unfinished portions or areas of the basement not intended as habitable rooms. exception: a receptacle supplying only a permanently installed fire alarm or burglar alarm system shall not be required to have ground-fault circuit-interrupter protection. informational note: see 760.41(b) and 760.121(b) for power supply requirements for fire alarm systems. receptacles installed under the exception to 210.8(a)(5) shall not be considered as meeting the requirements of 210.52(g).*
- *kitchens — where the receptacles are installed to serve the countertop surfaces*
- *sinks — where receptacles are installed within 1.8 m (6 ft) from the top inside edge of the bowl of the sink*
- *boathouses*
- *bathtubs or shower stalls — where receptacles are installed within 1.8 m (6 ft) of the outside edge of the bathtub or shower stall*
- *laundry areas*

G. SURGE PROTECTION DEVICE (or an approved equiva : PQ Protection "PQ Series", Current Technology "TG Series", Innovative Technology "PTX Series",

Square D Surgelogic "EMA Series", General Electric "Tranquell Series"

PART 2 - EXECUTION

A. GROUNDING:

Grounding shall comply with NEC Article 250 and include:

Proper ground conductor sizing for panel feeders and branch circuits.

Equipment ground conductors shall be continuous from the service entrance and separate from the neutral conductor. The neutral shall not serve as the ground for equipment.

B. RACEWAYS:

Furnish and install underground raceways for power company service and telephone company service as per utility company specifications and coordinate the exact routing of these raceways with the utility company.

All raceways in finished areas shall be concealed and all outlets in finished areas shall be mounted flush with finished walls.

All raceways and non-current carrying metal enclosures shall be mechanically and electrically grounded.

A minimum 24" radius elbows and conduits shall be used when rising from below the floor to the surface of walls, except for low-voltage raceways.

Low-voltage raceways (for systems operating at 70 volts or below) shall be Type 4 polyvinyl chloride (PVC), UL-listed non-metallic. All low-voltage raceways must have bushings at all terminals. A nylon pull cord with a minimum 50-pound test rating shall be left in all raceways where conductors are not installed.

C. OUTLET BOXES:

Boxes shall be independently secured to the structure, separate from conduit supports. Plaster rings shall be installed for recessed units.

The contractor shall coordinate unit locations shown on electrical drawings with actual locations established by the architect or mechanical contractor. Any discrepancies must be clarified before proceeding with installation.

ELECTRICAL WORK CONTINUE

D. PANELBOARDS:

Each panelboard shall include a laminated, rigid plastic label below the directory with contractor details and year of installation.

Breakers shall be clearly numbered. For designated spaces, provide the necessary hardware for future breaker installations.

and type of outlets.

E. DISCONNECT SWITCHES:

Disconnect switches shall be NEMA-rated duty, in compliance with Fed. Spec. W-S-865C, rated 240V for 208V systems.

Each motor shall have a non-fused disconnect switch or breaker within sight of the motor location. Sized to the next standard size. Exterior switch shall be NEMA 3R rated min.

F. BRANCH CIRCUIT WIRING:

Conductors shall be copper, with no wire smaller than #14 AWG used for any branch circuit.

Conductor insulation shall be Type THHN (U.N.O)

except for ballast connections. All joints shall be completed using only Scotch-Lock connectors of types Y, G, R, or B.

At each outlet, an 8-inch wire loop shall be left for device connection.

Fluorescent fixture wiring shall comply with the National Electrical Code, Article 410-24, and use THHN insulation.

Outlets shall be wired as specified in the plans.

must be considered where applicable. For 20A circuits exceeding 75 feet in length, a minimum of #10 AWG shall be

before the first receptacle.

G. WIRING DEVICES:

Provide all wiring devices indicated on plans. Color of device selected by architect/owner at time of submittal.

H. DEVICE PLATES:

Wiring devices shall have plastic-type plates in colors selected by the architect/owner.

I. FIXTURES:

Fixtures shall be installed per the fixture schedule (or an approved equivalent), wired as designated in the drawings.

manufacturers include Jefferson, Advance, Sola, or an approved equal energy-saving type.

J. LAMPS:

LED lighting shall be provided throughout.

K. POWER AND CONTROL WIRING TO EQUIPMENT:

Install all wiring from the panel to the motor terminal, provide all required disconnects and complete all power connections within these circuits.

Control equipment, including motor starters, relays, line voltage controls, transformers, low voltage controls, and devices necessary for the operation of heating, air conditioning, ventilation, and plumbing systems, shall be supplied and installed by the respective subcontractor.

L. MOTOR STARTER:

Contractors shall supply all motor starters that are not provided with the equipment.

GENERAL NOTES

Weatherproof devices shall include lift cover plates for exterior applications.

A/C compressors shall be installed above the base flood elevation.

Electrical outlets, receptacles and lighting below base flood elevation shall be installed at highest permitted elevation and shall be installed on a separate independent circuit from those in habitable areas.

No appliance outlets shall be installed below the base flood elevations.

Connect all emergency lighting (exit lights) to the same circuit as the normal lighting in the area, positioned ahead of any switches, or ensure compliance with NEC 700-12.

Main circuit breaker panel shall be installed above the base flood elevation.

All work shall be rigidly mounted and supported.

Provide tamper-resistant receptacles per NEC 406.12.

ARC-fault circuit- interrupter protection for the dwelling units per nec 210.12(a)
210.12(a)(1) a listed combination-type arc-fault circuit interrupter, installed to provide protection of the entire branch circuit.
210.12(a)(2) a listed branch/feeder-type afci installed at the origin of the branch-circuit in combination with a listed outlet branch-circuit type arc-fault circuit interrupter installed at the first outlet box on the branch circuit. the first outlet box in the branch circuit shall be marked to indicate that it is the first outlet of the circuit.
210.12(a)(3) a listed supplemental arc protection circuit breaker installed at the origin of the branch circuit in combination with a listed outlet branch-circuit type arc-fault circuit interrupter installed at the first outlet box on the branch circuit where all of the following conditions are met: (see nec)

in combination with a listed branch-circuit overcurrent protective device where all of the following conditions are met: (see nec)

equipment to obtain correct wire sizes and over-current protection prior to installation of rough electrical wiring. the electrical contractor shall make the electrical connection to all equipment requiring current.

Existing raceways and cabling may be reused if compliant with NEC.

Verify exact location of electrical outlets and lights prior to execution of rough-in work.

overhead electrical conductor clearances, horizontal and vertical shall be maintained.

All electrical devices and fixtures in all living quarters to be protected with AFI breaker.

515.21 - 515.37, the Residential Swimming Pool Safety Act.

Electrical contractor to provide clearances for electrical equipment per NEC 110.26

ALL THE DESIGN AND DETAILS ON THIS PLAN ARE THE PROPERTY OF LIGHTNING ENGINEERING AND SHALL NOT BE USED, COPIED OR REPRODUCED WITHOUT THE WRITTEN PERMISSION OF LIGHTNING ENGINEERING.

I HEREBY CERTIFY AS THE BUILDING DESIGN ENGINEER OF RECORD, THAT THE BUILDING DESIGN AS SHOWN ON THESE PLAN AND AS ACCOMPANIED BY DESIGN & SUPPORT DOCUMENTS COMPLIES WITH THE BUILDING CODE. THIS CERTIFICATION DOES NOT INCLUDE ROOF TRUSS COMPONENTS OF WHICH THE TRUSS DESIGN ENGINEER IS THE ENGINEER OF RECORD. THE TRUSS DESIGN ENGINEER IS RESPONSIBLE TO COMPLIANCE WITH THE BUILDING CODE WITH SUPPLEMENTS.

LIGHTNING ENGINEERING
4161 TAMIAMI TRAIL UNIT 101.
PORT CHARLOTTE, FL 33980
PH: 941-639-5000
FAX: 941-979-8195

PROJECT NAME & ADDRESS:

NOVA PARKS
46442 PARK CHALET PL, STERLING, VIRGINIA, 20165
MARC O'GRADY DESIGN

No.	Description	Date
1		
2		
3		
4		
5		

DRAWN BY: PLC
REVISED BY: JPP
PROJECT NO: 26 173 78
SHEET TITLE: ELECTRICAL DETAILS
SHEET NUMBER: ED-101

HVAC NOTES - INTERNATIONAL BUILDING CODE

THIS DESIGN COMPLIES WITH INTERNATIONAL BUILDING, RESIDENTIAL, EXISTING RESIDENTIAL, MECHANICAL, AND ENERGY CODES. RESIDENTIAL BASIS OF DESIGN / CONTRACTOR NOTES:

These HVAC drawings, heat load calculations, and energy calculations are based on the architectural drawings provided for permit application.

Using the architectural construction drawings, ACCA HVAC design procedures were performed: (1) room by room heat load calculations are performed to determine the buildings thermal zones and room by room demands in accordance with manual J heat load calculation procedure (2) the heat load calculations were used to select the HVAC equipment capacities in compliance with manual S equipment selection procedure (3) the room by room demand calculations were used to design the duct system in accordance with manual D duct design (4) room air device type, size, and location were based on the rooms required cfm demand, the duct type, and room geometry, in accordance with manual T room air distribution selection procedure (5) Florida energy calculations were performed based on the ACCA hvac design procedures.

For detailed building envelope information (component layers, insulation R values, NFRC glass values, component types and colors, quantity, etc.) see the "Energy Code Calculations". HVAC installer must field inspect the building envelope component types and sizes prior to any HVAC installation - be sure the building constructed matches the "Total Building Summary Loads" page, the room by room floor plan layout, and the energy code forms. Building envelope construction practice "average" was used in the building infiltration calculations, field verify the building envelope (air barrier in contact with the thermal barrier) fully encapsulates the conditioned space. HVAC Installer must field verify sealed draft stops exist that are isolating the wall cavities from the exterior and/or hot vented attic spaces. Buildings with hot vented attic spaces require the air and thermal barriers to be located at the ceiling plane. Buildings with unvented attics / or single assembly roofs (solid flat, low slope, sealed pitched, open web flat truss) require the air and thermal layer be located at the roof plane. Note: acoustical tile ceilings are not air barriers, paper faced insulation is not an air barrier - thermal layers in contact with a grid ceiling are ignored in the heat load and energy code calculations.

The room air devices, air cfm values, and branch duct sizes shown per room are based on the peak cooling season design conditions with hvac equipment capacities based on manual S equipment selection procedure for the buildings specific site location. This peak demand makes up approximately 15% of the cooling season, the remaining 85% of the cooling season (part load conditions) requires dedicated dehumidification equipment if year round control of indoor moisture content is expected. Year round moisture control is not part of this construction drawing and requires the latent heat load calculations are performed at part load design conditions, resulting in latent demands at least 20% higher when compared to the peak design conditions. Dedicated dehumidification equipment is required to control moisture content year round in Florida. Dehumidification equipment (Honeywell DH-90 or Ultra-Air XT150H or similar) will monitor and control moisture content year round using a humidistat or dew point sensor. Provide ducted dedicated dehumidifier(s) for buildings that contain an unvented "sealed attic" space (example: spray foam insulation at roof deck underside or roof is insulated above the roof deck). Mount the dehumidifier(s) in the sealed attic near the roof peak. For buildings with a hot vented attic space, the dehumidification equipment is ducted to the conditioned space and controls the moisture content inside the conditioned space using a humidistat or dew point sensor. For healthier and cleaner indoor air, install a Plasma Air Model 600 ionizer or similar +/or (optional) a large capacity HEPA filter.

These HVAC drawings were based on the architectural drawings provided for permit application. Any modifications to the building room layout, occupancy amount, building use or classification, building compass orientation, or building envelope component material type and / or size must be communicated to the original HVAC designer. HVAC Installer should red line sketch on these HVAC drawings any field changes to be made during construction and submit the "as built" red line sketch to the original HVAC designer for review and redesign - prior to any further HVAC installation. Alternate air ducts sizes must be equal to the listed size shown, don't exceed a 3/1 aspect ratio on alternate duct sizes. Don't install a cooling system into a building that is missing a full building envelope.

CODE OFFICIAL + HVAC CONTRACTOR NOTES:

International Building Code section abbreviations: IBC = Building, IMC = Mechanical, IEC = Energy

These HVAC drawings are not intended to show exact detail of every item required to meet the code requirements. The proposed duct routing is general in nature, field conditions and building structure may dictate the exact mounting configuration of the HVAC system(s). International building code sections are listed for each HVAC drawing symbol to be used by the installing HVAC contractor and code official(s). Installer should reference the code sections prior to fabrication or installation of any HVAC system component. These HVAC drawings comply with the International Building Codes sections IBC101.4.2, IBC101.4.6, IBC105.3.1.2, IBC107.3.5 "Mechanical" Plan review criteria.

1) HVAC installation must comply with the International building codes, energy conservation codes, and mechanical codes. Obtain all required permits and inspections per code sections IBC105, IBC107, and IBC110.
2) Ventilation air required per IBC1203 + IMC401.2 + IEC403.6. This design could includes mechanically induced controlled ventilation for buildings that contain a forced air duct system, pressurizing the building interior during air handler operation, provided by a ventilation air duct and motorized damper. In cases when the ventilation rate is satisfied by the building infiltration rate, no ventilation air duct will be shown. The ventilation rate may also be satisfied by use of properly sized windows to the outdoors per IBC1203.5, manually operated by the occupant. For large buildings with few occupants, the building envelope infiltration rate may satisfy the minimum ventilation rate required, see "Total Building Summary Loads" page for infiltration rate. Small buildings with many occupants will usually require a ventilation air duct, motorized damper, and ventilation air duct routed to an approved exterior location, see "Total Building Summary Loads" page for ventilation air cfm amount. A mandatory blower door test, IEC402.4.1.2, must be performed to quantify the building's natural infiltration air cfm rate and determine the design ventilation air cfm amount will successfully pressurize the building's interior. If motorized ventilation is used the air damper will be dual controlled by both "run-time" and "manually on" control cycles. Installer may also add an air handler fan cycler to provide automatic air exchange during part load conditions. Interlock the ventilation air damper motor with the air handler fan motor for "run time" cycling. The occupants may also select "fan-on" cycle for continuous ventilation when the outdoor conditions are favorable (low heat and low moisture content).
3) Coordinate location of all equipment, fans, air devices, and building penetrations with the general contractor. Coordinate air device locations with the electrical contractor (smoke detectors), G.C. , and building owner - the proposed hvac air device locations are shown in the ideal location per Manual T room air device selection procedure, design alternate air device locations per Manual T. HVAC installer must field verify clearances and accessibility prior to fabrication or installation of the HVAC components. Protect the building structure per IMC302. Provide accessibility for elevated equipment per IMC306.5. Fabricate and install HVAC system components per IMC304 + IBC1307, and product manufacturers envelope penetration detail, IBC107.3.5 wind data for wall and roof penetrations, HVAC product installation instructions, HVAC equipment manufacturers installation instructions, and AHRI energy + equipment manufacturers expanded capacity ratings must be available on the construction site at time of code official inspections per IBC110.
4) All exterior building penetrations and exterior mounted HVAC equipment, wall vent caps, roof vent caps, intake air vents, and relief air caps, etc. must comply with IBC1609 wind loads. HVAC installing contractor must supply engineered product or equipment ANSI/AMCA 540 test information for attachment to the building envelope component per section IBC1609.1.2. A structural engineer's sealed drawing detail may be required for exterior equipment mounted above ground level per IBC1510.10. This hvac design does not provide structural, equipment, or hood tie down details. See structural engineer's drawings and details for equipment support and tie down info when equipment manufacturers engineered data is not available.
5) All duct sizes shown are clear interior "free area" duct dimensions based on IMC603.2 manual D duct design. Add 3" to listed sizes for R-6 exterior duct dimensions - add 4" to listed sizes for R-8 exterior duct dimensions. Fiberglass duct board shown is equal to Knauf 1.5 or similar", R-6, fabricate and install per SMACNA standards. Flexible ducts shown are equal to Atco 36 series R-6 class one air duct or similar, not limited in length per IMC603.6.1.1. Construct all ducts per manufacturer's installation instructions and SMACNA standards for a maximum 1" w.g. Suspend and support the ducts from the building structure per IMC603. Use 26 gauge sheet metal or rigid foil face fiberglass duct board for rigid duct penetrations of private garages per IMC603.7 and protect ducts per IMC607. Mastic seal all ducts installed outside the building's thermal envelope per UL-181 and IMC603.9. Provide accessible volume control dampers in branch ducts per IMC603.18. General exhaust ducts used for exhaust fan duct, clothes dryer duct, make up air duct, and residential cooking appliance duct up to 14" in diameter (or equal free area in rectangular) are constructed from 28 gauge sheet metal "snap lock pipe or similar", use SMACNA standards for required gauge of larger metal ducts, mastic seal ducts per table FMC603.9. Use flexible air ducts or 28 gauge sheet metal "snap lock pipe or similar" for ventilation air ducts.
6) Provide a condensate drain piping system per IMC307, and a refrigerant piping system per IMC1107. Extend condensate drain discharge 12" minimum from the building exterior wall, discharge to grass or other approved location, a condensate drywell may be required. Provide piping and supports for both condensate and refrigerant piping per FMC305.
7) Provide a balanced return air system per IMC601.6. All enclosable rooms require a 1" undercut on the interior door, allowing about 30 cfm of air relief per 30" wide door. Habitable spaces require door undercut plus a means for air transfer or a ducted return air. Pressure differentials across the restricted room can't exceed .01 inch w.g. Enclosable rooms located on the building exterior envelope should be balanced slightly positive. Size ducted transfer air ducts free area 1.5 times larger than the supply air delivered to the enclosed room(s). Size direct through wall or door grilles at 50 square inches of grille free area to 100 cfm.
8) Attic mounted equipment must contain a shut off device to alert the home owner if the primary condensate drain line is not working properly. Using 16 point bold text, Post a "home owner notice" on the electrical service panel alerting the home owner that the HVAC air handler is located in the attic space, see IEC403.3.6 for full compliance description and "notice to home owner" language required. Provide a sealed attic access panel for hot vented attics, a safe workers access deck, an attic light fixture with switch, and an electrical plug outlet.
9) Upon completion of the HVAC system installation, per manual D chapter 16, test equipment operating capacities for both cooling and heating to verify the equipment is functioning to the listed capacity. Verify the air handler total air flow cfm matches the HVAC equipment schedule or heat load calculation minimum system airflow rate. No duct system is self-balancing, adjust each room's branch duct volume damper to achieve the listed air flow values shown or to meet the building owner's needs. Use the air device volume damper for the last 10% of air balance to avoid noise at the air device face. Room air flow balance for buildings with concealed ducts can be accomplished during the "rough in" stage of construction, prior to concealment of ducts. With the building air barrier fully intact, install and operate the air handler until proper air flow is adjusted per room, a balanced return air path must also be present. Use a self-compensating air flow hood for airflow measurements, perform air balance procedure in accordance with manual B or NEBB standards. When required by code, provide the air balance report to the building owner and code officials. A blower door test must be performed to verify that the building envelope natural leakage rate does not exceed the infiltration or ventilation cfm rate shown on the "Total Building Summary Loads" page.
10) Contractor to locate all programmable thermostats per 308.1 general fbc-a : thermostat reach ranges shall comply w/ table 308 (48" a.f.f)
11) HVAC sequence of proper operation: The thermostat is set to "auto" mode and will monitor the conditioned space temperature and provide heating, cooling, and ventilation when required. Upon a call for heating, the air handler fan interlock will open the ventilation air damper and operate the indoor fan and heat pump condenser and/or electric heat strip until the space conditions are satisfied - use a 70 degree thermostat setting during the heating season. Upon a call for cooling, the air handler fan interlock will open the ventilation air damper and operate the indoor fan and heat pump condenser until the space conditions are satisfied - use a 75 degree thermostat setting during the cooling season. During favorable outdoor conditions, when the temperature and humidity is low - the thermostat may be set to "fan on" for continuous air circulation and introduction of ventilation air. For newly constructed homes to be energy code compliant (IEC403.1), the HVAC installer must set the programmable thermostat to provide heating up to 70 degrees and cooling down to 78 degrees. Be sure not to overcool the conditioned space - overcooling a building is defined as a temperature lower than the dew point temperature for the interior conditioned space - most buildings can easily be driven to dew point temperatures during part load conditions. Overcooling a building successfully requires specialized HVAC equipment and controls. The heat removal (sensible heat) and moisture removal (latent heat) must be de-coupled and independently controlled for buildings to achieve temperature's lower than the "dew point safe" energy code set point of 78 degrees.

Transfer Grille Sizing Calculations

Table 1 shows the sizing specifications for using 10", 12" or 14" wide transfer grilles with 70% free area as a function of room supply air flow. The transfer grille sizing includes allowance for one 32" by 1/2" door undercut.

Table 1

Total Room Supply Airflow (CFM)	Transfer grille height required for listed width (in inches)			Jump Duct Dia. Required (in)	High/Low Wall Transfer Stud Spacing Needed (in)
	10"	12"	14"		
75 or less	4	4	4	6	16
76 - 100	6	6	4	8	16
101 - 125	8	6	6	8	24
126 - 150	10	8	6	10	n/a
151 - 175	12	10	8	10	n/a
176 - 200	14	12	10	12	n/a
201 - 225	16	14	12	12	n/a
226 - 250	18	14	12	12	n/a
251 - 275	20	16	14	14	n/a
276 - 300	22	18	16	14	n/a
301 - 325	24	20	16	14	n/a
326 - 350	26	22	18	16	n/a

Based on Q = 1.07 A dP^.5 for square edged orifice flow
where: Q = room supply flow (cfm)
1.07 = constant, including unit conversions
A = free area (in2)
dP = pressure difference between room and common area (Pa)

Adjust free area up to account for more friction pressure loss. For example:
0.6 for high/low wall transfer
0.7 for through-wall transfer and jump duct

KEYNOTES

1. PROVIDE NEW AIR HANDLER PER SCHEDULE. MOUNT FROM STRUCTURE IN CEILING CAVITY. ACCESS THROUGH HATCH. SEE ARCHITECTURAL DRAWINGS FOR FULL ACCESS DETAILS.
2. PROVIDE NEW AIR HANDLER PER SCHEDULE. MOUNT TO FLOOR.
3. PROVIDE CONDENSING UNIT(S) PER SCHEDULE. MOUNT TO SLAB PER DETAIL.
4. ROUTE REFRIGERANT PIPING UP IN WALL FURRING TO CEILING CAVITY. ROUTE TO CORRESPONDING AIR HANDLER AS INDICATED.
5. ROUTE REFRIGERANT PIPING UP IN WALL FURRING TO 2ND FLOOR.
6. PROVIDE BROAN PRESSURE SENSOR FOR MAKE-UP AIR DAMPER. SENSOR TO PROVIDE SIGNAL TO OPEN MAKE-UP AIR DAMPER WHEN HOOD FAN IS ENERGIZED.
7. PROVIDE HOOD EXHAUST DUCT TO GRILL HOOD. SEE ARCHITECTURAL PLANS FOR HOOD INFORMATION.
8. PROVIDE NEW DEHUMIDIFIER PER SCHEDULE. MOUNT TO FLOOR IN MECHANICAL ROOM.
9. PROVIDE NEW DEHUMIDIFIER PER SCHEDULE. MOUNT FROM STRUCTURE IN CEILING CAVITY. ACCESS THROUGH HATCH.
10. PROVIDE WALL CAP SIZED TO MATCH CONNECTED EXHAUST DUCTWORK PER REQUIREMENTS OF THE FBC-M.
11. PROVIDE STAINLESS STEEL GRILLE PER SCHEDULE. MOUNT GRILLE IN BOTTOM OF SOFFIT.
12. PROVIDE 4" OR 6" X-VENT SIZED TO MATCH CONNECTED EXHAUST DUCT.
13. PROVIDE BROAN MODEL #MD10TU AUTOMATIC MAKE-UP AIR DAMPER, NORMALLY CLOSED, INTERLOCKED TO OPEN WHEN KITCHEN EXHAUST HOOD FAN IS IN OPERATION. PROVIDE 12"ø DUCT UP TO WALL CAP.
14. PROVIDE 4"ø DRYER EXHAUST VENT UP TO ROOF CAP.

SOME KEYNOTES MAY NOT BE USED ON THIS PLAN

NOTES:

* ALL DUCT INSIDE DIMENSIONS AS NOTED

SYMBOL LEGEND

TAG	DESCRIPTION	NOTES
SD	SUPPLY DIFFUSER	1
RG	RETURN GRILLE	1
TG	TRANSFER GRILLE	2
EF	EXHAUST FAN	3
AHU	INTERIOR UNIT	4
CU	EXTERIOR UNIT	4
D	DRYER	5

NOTES:

1. SEE AIR DISTRIBUTION SCHEDULE
2. SEE TRANSFER GRILL TABLE (OPTIONAL)
3. SEE EXHAUST FAN DETAILS ON SHEET MD-100 (OCCUPANCY LIGHT SWITCH OPERATED UNLESS NOTED OTHERWISE)
4. SEE AHU, CU DETAILS ON SHEET MD-100
5. SEE HOOD EXHAUST DETAILS ON SHEET MD-100
6. ALL DIFFUSERS AND GRILLES ARE IN THE FLOOR.
7. ALL DUCTWORK WILL RUN UNDER THE FLOOR STRUCTURE WITHIN THE CRAWL SPACE.

"ALL LISTED SUPPLY AIRFLOWS (CFM) ARE CALCULATED FOR HEATING-MODE OPERATION UNLESS OTHERWISE NOTED. COOLING-MODE AIRFLOW REQUIREMENTS MAY DIFFER. CONTRACTOR SHALL REFER TO THE COOLING/HEATING AIRFLOW TABLE FOR SEASONAL AIRFLOW VALUES AND SHALL ADJUST BALANCING DAMPERS ACCORDINGLY TO ACHIEVE PROPER SYSTEM PERFORMANCE IN BOTH COOLING AND HEATING MODES."

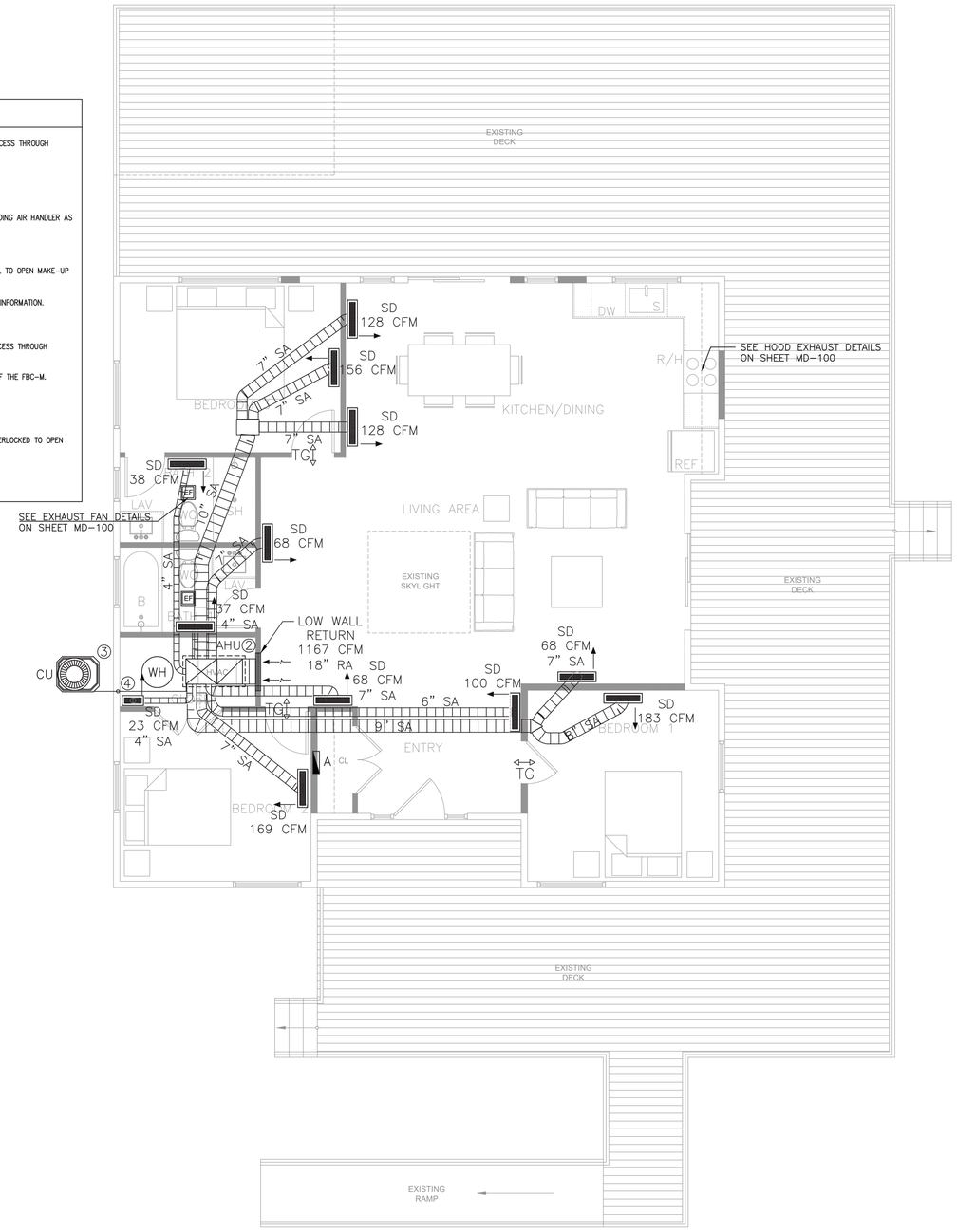

MECHANICAL PLAN
1/4" = 1'-0"

ALL THE DESIGN AND DETAILS ON THIS PLAN ARE THE PROPERTY OF LIGHTNING ENGINEERING AND SHALL NOT BE USED, COPIED OR REPRODUCED WITHOUT THE WRITTEN PERMISSION OF LIGHTNING ENGINEERING.

I HEREBY CERTIFY AS THE BUILDING DESIGN ENGINEER OF RECORD, THAT THE BUILDING DESIGN AS SHOWN ON THESE PLAN AND AS ACCOMPANIED BY DESIGN & SUPPORT DOCUMENTS, COMPLIES WITH THE FLORIDA BUILDING CODE. THIS CERTIFICATION DOES NOT INCLUDE ROOF TRUSS COMPONENTS OF WHICH THE TRUSS DESIGN ENGINEER IS THE ENGINEER OF RECORD FOR THE ROOF TRUSS SYSTEM AND ASSOCIATED COMPLIANCE WITH THE BUILDING CODE WITH SUPPLEMENTS.

LIGHTNING ENGINEERING
4161 TAMIAMI TRAIL UNIT 101.
PORT CHARLOTTE, FL 33980
PH: 941-979-0500
FAX: 941-979-8195

PROJECT NAME & ADDRESS:

NOVA PARKS
46442 PARK CHALET PL, STERLING, VIRGINIA, 20165
MARC O'GRADY DESIGN

No.	Description	Date
1		
2		
3		
4		
5		

DRAWN BY: PLC
REVISED BY: JPP
PROJECT NO: 26 173 78
SHEET TITLE: MECHANICAL PLAN
SHEET NUMBER: M-100

AHU

Design Information

	Htg	Clg	Infiltration	
Outside db (°F)	18	92	Method	Simplified
Inside db (°F)	70	75	Construction quality	Semi-tight
Design TD (°F)	52	17	Fireplaces	0
Daily range	-	M		
Inside humidity (%)	50	50		
Moisture difference (gr/lb)	44	40		

HEATING EQUIPMENT

Make	CARRIER
Trade	CARRIER
Model	27SCA536A00300
AHRI ref	214101253
Efficiency	7.5 HSPF2
Heating input	
Heating output	35600 Btuh @ 47°F
Temperature rise	28 °F
Actual air flow	1167 cfm
Air flow factor	0.051 cfm/Btuh
Static pressure	0.50 in H2O
Space thermostat	
Capacity balance point = 13 °F	
Backup:	
Input = 7 kW, Output = 22309 Btuh, 100 AFUE	

COOLING EQUIPMENT

Make	CARRIER
Trade	CARRIER
Cond	27SCA536A00300
Coil	FJ5ANXB36L00
AHRI ref	214101253
Efficiency	12.0 EER2,14.5 SEER2
Sensible cooling	24500 Btuh
Latent cooling	10500 Btuh
Total cooling	35000 Btuh
Actual air flow	1167 cfm
Air flow factor	0.049 cfm/Btuh
Static pressure	0.50 in H2O
Load sensible heat ratio	0.92

ROOM NAME	Area (ft²)	Htg load (Btuh)	Clg load (Btuh)	Htg AVF (cfm)	Clg AVF (cfm)
BEDROOM 2	132	3282	2155	169	105
BEDROOM 1	144	3554	1987	183	97
CLOSET	34	439	166	23	8
BATH 1	47	717	688	37	33
BATH 2	47	739	780	38	38
BEDROOM 3	135	3035	3005	156	146
ENTRY	84	1953	906	100	44
KITCHEN/DINING	248	4995	3913	257	190
LIVING AREA	354	3972	10374	204	505
AHU	1224	22686	23975	1167	1167
Other equip loads		0	0		
Equip. @ 0.97 RSM			23304		
Latent cooling			2120		
TOTALS	1224	22686	25424	1167	1167

Heating

Component	Btuh/ft²	Btuh	% of load
Walls	4.5	4341	19.1
Glazing	18.1	5611	24.7
Doors	0	0	0
Ceilings	1.1	1271	5.6
Floors	2.0	2435	10.7
Infiltration	2.3	2842	12.5
Ducts		6185	27.3
Piping		0	0
Humidification		0	0
Ventilation		0	0
Adjustments		0	0
Total		**22686**	**100.0**

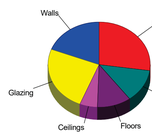

Cooling

Component	Btuh/ft²	Btuh	% of load
Walls	1.8	1785	7.4
Glazing	34.6	10693	44.6
Doors	0	0	0
Ceilings	1.1	1271	5.3
Floors	0.7	808	3.4
Infiltration	0.4	487	2.0
Ducts		6110	25.5
Ventilation		0	0
Internal gains		2820	11.8
Blower		0	0
Adjustments		0	0
Total		**23975**	**100.0**

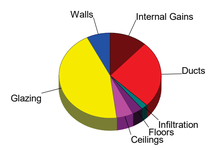

Latent Cooling Load = 2120 Btuh
Overall U-value = 0.075 Btuh/ft²-°F, Window / Floor Area = 25.3 %

WARNING: window to floor area ratio = 25.3% - more than 25%.

LBP/LBPH/LBM/LBMH
Linear Bar Grille

PERFORMANCE DATA

Heavy Duty Mandrel Linear Bar Grille (LBMH) – Core 15A

Size	Static Pressure (in. w.g.)	0.011	0.024	0.044	0.069	0.099	0.133	0.175	0.222	0.275
1 ½ in.	Flow Rate (cfm/ft)	14	19	21	24	27	31	35	40	44
	Sound (NC)	-	-	-	17	21	26	-	30	36
	Throw Sill or Floor	1-1-1	2-2-2	4-4-4	6-6-6	8-8-9	9-10-11	10-11-13	12-13-15	13-15-18
	(ft) Sidewall	2-4-6	4-7-10	6-9-13	7-11-16	8-13-19	9-15-21	10-16-23	12-18-25	13-20-28
2 in.	Flow Rate (cfm/ft)	17	25	34	43	51	60	68	77	86
	Sound (NC)	-	-	-	-	21	25	29	33	36
	Throw Sill or Floor	1-1-1	4-4-4	6-6-6	9-9-9	11-11-12	12-13-15	14-15-17	15-17-19	16-18-20
	(ft) Sidewall	3-5-7	5-8-11	7-11-15	9-14-19	11-16-22	12-18-25	14-20-27	15-22-29	16-24-32
2 ½ in.	Flow Rate (cfm/ft)	23	35	47	59	71	82	95	106	118
	Sound (NC)	-	-	-	-	17	23	27	31	34
	Throw Sill or Floor	1-1-1	5-5-5	8-8-8	10-10-11	13-14-15	15-16-17	16-18-20	20-20-21	22-22-23
	(ft) Sidewall	4-6-8	6-9-12	8-12-16	10-15-20	13-18-24	15-21-27	16-22-30	20-24-34	22-30-38
3 in.	Flow Rate (cfm/ft)	31	47	62	78	93	109	125	140	156
	Sound (NC)	-	-	-	17	20	25	29	33	37
	Throw Sill or Floor	2-2-2	6-6-6	9-9-10	12-12-13	15-16-17	18-19-20	20-21-22	23-23-23	25-25-25
	(ft) Sidewall	4-6-8	7-10-14	9-13-18	12-17-22	15-20-25	18-23-29	20-26-33	23-30-37	25-30-42
3 ½ in.	Flow Rate (cfm/ft)	40	59	79	98	118	138	158	178	198
	Sound (NC)	-	-	-	17	21	26	31	36	41
	Throw Sill or Floor	2-2-2	7-7-7	10-10-11	15-15-15	17-18-19	20-21-22	22-23-24	25-25-26	27-27-27
	(ft) Sidewall	5-7-10	8-12-17	10-16-23	15-19-24	17-22-27	20-25-31	22-28-35	25-32-39	27-32-44
4 in.	Flow Rate (cfm/ft)	46	69	93	116	139	161	183	206	230
	Sound (NC)	-	-	-	17	21	26	31	36	41
	Throw Sill or Floor	3-3-3	8-8-8	12-12-13	15-15-16	19-19-20	21-22-23	24-25-25	26-26-27	28-28-29
	(ft) Sidewall	6-8-11	9-12-16	12-16-20	15-20-25	19-24-29	21-26-32	24-30-39	26-33-40	30-37-44
5 in.	Flow Rate (cfm/ft)	62	92	122	152	182	212	242	273	302
	Sound (NC)	-	-	17	18	24	29	33	37	41
	Throw Sill or Floor	4-4-4	9-9-9	14-14-14	17-17-17	21-21-22	24-24-24	27-27-27	29-29-29	32-32-32
	(ft) Sidewall	7-9-12	11-14-18	14-18-22	17-21-26	21-26-31	24-29-35	27-33-40	30-36-43	33-40-47
6 in.	Flow Rate (cfm/ft)	76	113	152	190	228	266	302	342	380
	Sound (NC)	-	-	-	19	25	30	35	38	41
	Throw Sill or Floor	5-5-5	10-10-10	15-15-15	18-18-18	23-23-23	25-25-25	28-28-29	31-31-31	34-34-34
	(ft) Sidewall	8-10-13	12-15-19	15-19-23	20-24-28	23-27-32	26-31-37	29-34-40	33-40-45	37-43-49

Heavy Duty Mandrel Linear Bar Grille (LBMH) – Core 16A

Size	Static Pressure (in. w.g.)	0.013	0.027	0.05	0.079	0.111	0.156	0.199	0.252	0.31
1 ½ in.	Flow Rate (cfm/ft)	12	19	25	31	38	44	50	56	62
	Sound (NC)	-	-	21	27	33	38	41	45	48
	Throw Sill or Floor	1-1-1	3-3-3	4-4-4	7-7-7	9-9-10	10-11-12	12-13-15	13-14-16	14-16-18
	(ft) Sidewall	2-4-6	4-7-10	6-10-14	7-12-17	9-14-20	10-16-23	12-18-25	13-20-27	14-22-30
2 in.	Flow Rate (cfm/ft)	18	27	36	44	54	63	72	81	88
	Sound (NC)	-	-	-	17	24	30	36	40	44
	Throw Sill or Floor	1-1-1	4-4-4	6-6-6	9-9-9	11-11-12	12-13-15	14-16-18	15-17-19	16-18-20
	(ft) Sidewall	3-5-7	5-8-11	7-11-15	9-14-19	11-16-22	12-18-25	14-20-27	15-22-30	16-24-32
2 ½ in.	Flow Rate (cfm/ft)	24	35	47	59	71	83	94	106	118
	Sound (NC)	-	-	-	17	23	28	32	36	39
	Throw Sill or Floor	1-1-1	5-5-5	8-8-8	10-10-11	13-14-15	14-15-17	17-18-20	19-20-21	21-22-23
	(ft) Sidewall	4-6-8	6-9-12	8-12-16	10-15-20	13-18-24	14-20-27	17-22-30	19-24-34	21-26-38
3 in.	Flow Rate (cfm/ft)	29	43	58	72	87	101	116	130	144
	Sound (NC)	-	-	-	17	22	29	33	37	41
	Throw Sill or Floor	2-2-2	6-6-6	9-9-9	12-12-13	15-15-16	17-18-19	20-21-22	21-22-23	23-23-24
	(ft) Sidewall	4-6-9	7-10-13	9-13-17	12-16-21	15-20-25	17-22-28	20-26-32	21-28-35	23-31-39
3 ½ in.	Flow Rate (cfm/ft)	40	58	79	87	104	122	139	157	174
	Sound (NC)	-	-	17	23	29	34	39	41	44
	Throw Sill or Floor	2-2-2	8-8-8	11-11-11	15-15-15	16-17-18	19-20-21	22-22-23	24-24-25	26-26-26
	(ft) Sidewall	5-7-9	8-11-14	11-15-19	13-17-22	16-21-26	19-24-30	22-28-34	23-30-37	26-33-41
4 in.	Flow Rate (cfm/ft)	58	43	63	84	105	126	147	168	188
	Sound (NC)	-	-	-	18	25	30	34	39	42
	Throw Sill or Floor	3-3-3	9-9-9	12-12-12	15-15-15	18-19-20	21-21-22	23-24-25	25-25-26	28-28-28
	(ft) Sidewall	5-7-10	9-12-15	12-16-20	15-19-24	18-23-28	21-26-32	23-29-35	25-32-39	29-36-43
5 in.	Flow Rate (cfm/ft)	54	81	108	135	162	189	216	243	270
	Sound (NC)	-	-	-	19	26	31	36	40	43
	Throw Sill or Floor	3-3-3	9-9-9	13-13-13	16-16-17	20-20-21	23-23-24	25-25-26	28-28-28	31-31-31
	(ft) Sidewall	7-9-12	10-13-17	14-18-22	16-21-26	20-25-30	23-28-34	25-31-37	28-34-41	31-38-45
6 in.	Flow Rate (cfm/ft)	79	118	157	197	236	275	314	354	393
	Sound (NC)	-	-	-	19	26	31	36	40	43
	Throw Sill or Floor	4-4-4	10-10-10	14-14-14	18-18-18	22-22-22	25-25-25	28-28-28	30-30-30	32-32-32
	(ft) Sidewall	8-10-13	11-14-18	15-19-23	19-23-27	23-27-31	25-30-35	28-33-39	31-37-43	34-40-46

LBP/LBPH/LBM/LBMH
Linear Bar Grille

PERFORMANCE DATA

Heavy Duty Mandrel Linear Bar Grille (LBMH) Core 25B/25C

Size	Static Pressure (in. w.g.)	0.01	0.022	0.04	0.063	0.09	0.121	0.159	0.202	0.25
1 ½ in.	Flow Rate (cfm/ft)	12	18	24	30	36	42	48	54	60
	Sound (NC)	-	-	-	-	18	24	28	31	34
	Throw Sill or Floor	1-1-1	2-2-2	4-4-4	7-7-7	8-8-10	10-11-12	11-12-13	12-14-16	14-16-18
	(ft) Sidewall	2-4-6	4-7-10	6-9-13	7-10-17	8-13-19	10-16-22	11-17-24	12-18-26	14-21-29
2 in.	Flow Rate (cfm/ft)	20	29	39	49	59	69	79	89	98
	Sound (NC)	-	-	-	-	21	25	29	33	36
	Throw Sill or Floor	1-1-1	4-4-4	7-7-7	9-9-10	10-11-13	13-14-16	14-16-18	15-17-20	17-19-21
	(ft) Sidewall	3-5-7	5-8-12	7-11-16	9-14-20	10-16-23	13-18-26	14-21-28	15-20-30	17-25-33
2 ½ in.	Flow Rate (cfm/ft)	28	43	57	71	85	99	117	125	142
	Sound (NC)	-	-	-	18	23	27	32	34	37
	Throw Sill or Floor	1-1-1	6-6-6	8-8-9	11-12-13	13-14-16	15-17-18	18-20-22	21-22-23	22-23-24
	(ft) Sidewall	4-6-8	6-9-13	8-12-17	11-15-22	13-19-25	15-22-29	18-25-32	21-28-36	22-29-38
3 in.	Flow Rate (cfm/ft)	38	57	76	95	114	133	151	170	190
	Sound (NC)	-	-	-	18	20	25	32	35	40
	Throw Sill or Floor	2-2-2	7-7-7	10-10-11	12-13-15	15-16-18	18-19-20	20-22-24	24-24-25	26-26-27
	(ft) Sidewall	5-7-10	7-11-15	10-14-19	12-17-23	15-21-27	18-24-31	20-27-34	24-31-39	26-34-42
3 ½ in.	Flow Rate (cfm/ft)	45	68	91	114	133	159	194	205	228
	Sound (NC)	-	-	-	18	20	26	30	34	37
	Throw Sill or Floor	3-3-3	8-8-8	12-12-12	15-15-16	18-19-20	20-21-22	23-24-25	25-26-27	29-29-29
	(ft) Sidewall	5-7-10	9-12-16	12-16-20	15-20-25	18-23-28	20-26-32	23-29-36	25-32-40	29-36-44
4 in.	Flow Rate (cfm/ft)	54	81	108	135	162	189	216	243	270
	Sound (NC)	-	-	-	18	21	26	31	34	38
	Throw Sill or Floor	3-3-3	9-9-9	13-13-13	16-16-17	20-20-21	23-23-24	24-25-26	28-28-28	31-31-31
	(ft) Sidewall	6-8-11	10-13-17	13-17-21	16-21-26	20-25-30	22-28-34	24-30-37	28-35-42	31-38-45
5 in.	Flow Rate (cfm/ft)	68	102	136	170	204	238	272	306	340
	Sound (NC)	-	-	-	18	24	29	33	37	41
	Throw Sill or Floor	4-4-4	10-10-10	14-14-14	18-18-18	22-22-23	25-25-25	27-27-28	30-30-30	34-34-34
	(ft) Sidewall	7-9-12	11-14-18	15-19-23	18-22-27	22-27-32	25-31-37	27-33-40	30-37-44	34-41-48
6 in.	Flow Rate (cfm/ft)	90	135	180	225	270	314	360	404	450
	Sound (NC)	-	-	-	17	24	30	34	38	41
	Throw Sill or Floor	5-5-5	10-10-10	15-15-15	19-19-19	23-23-23	25-25-25	28-28-29	31-31-31	36-36-36
	(ft) Sidewall	9-11-14	13-16-20	16-20-24	20-24-29	24-29-34	28-33-39	30-35-41	34-40-46	38-44-50

Heavy Duty Mandrel Linear Bar Grille (LBMH) Core 26B/26C

Size	Static Pressure (in. w.g.)	0.012	0.026	0.048	0.076	0.107	0.145	0.191	0.242	0.3
1 ½ in.	Flow Rate (cfm/ft)	13	19	26	32	39	45	51	58	64
	Sound (NC)	-	-	19	24	31	36	40	43	46
	Throw Sill or Floor	1-1-1	3-3-3	5-5-5	7-7-7	9-9-10	10-11-12	12-13-15	13-15-17	14-16-18
	(ft) Sidewall	2-4-6	4-7-10	6-10-14	7-12-17	9-14-20	10-16-23	12-18-25	13-20-27	14-22-30
2 in.	Flow Rate (cfm/ft)	19	29	38	48	58	67	77	87	96
	Sound (NC)	-	-	16	23	29	33	37	41	44
	Throw Sill or Floor	1-1-1	4-4-4	7-7-7	9-9-10	11-12-13	13-14-15	15-16-18	16-18-20	17-19-22
	(ft) Sidewall	3-5-7	5-8-12	7-11-16	9-14-20	11-17-24	13-19-26	15-22-29	16-23-31	17-25-34
2 ½ in.	Flow Rate (cfm/ft)	26	40	53	66	79	92	105	119	132
	Sound (NC)	-	-	16	23	28	33	37	41	45
	Throw Sill or Floor	1-1-1	5-5-5	8-8-9	11-11-12	13-14-15	15-16-18	17-19-21	20-21-22	22-22-23
	(ft) Sidewall	4-6-8	6-9-13	8-12-17	11-16-21	13-18-24	15-21-27	17-24-31	20-27-34	22-29-38
3 in.	Flow Rate (cfm/ft)	39	59	78	98	118	137	157	177	196
	Sound (NC)	-	-	16	23	29	34	38	41	45
	Throw Sill or Floor	2-2-2	6-6-6	10-10-11	12-13-14	15-16-18	18-19-20	20-21-23	23-24-25	25-25-25
	(ft) Sidewall	4-6-9	7-10-14	10-14-19	12-17-22	15-20-26	18-24-30	20-27-33	23-30-37	25-33-40
3 ½ in.	Flow Rate (cfm/ft)	48	72	90	109	127	145	163	182	200
	Sound (NC)	-	-	17	23	29	34	39	41	44
	Throw Sill or Floor	2-2-2	8-8-8	11-11-12	15-15-15	17-18-19	21-21-22	23-23-24	25-25-26	27-27-27
	(ft) Sidewall	5-7-10	8-11-15	12-16-20	14-18-23	17-22-27	20-25-31	22-28-35	25-32-39	27-34-42
4 in.	Flow Rate (cfm/ft)	68	102	136	170	204	238	272	306	340
	Sound (NC)	-	-	17	23	29	34	38	42	45
	Throw Sill or Floor	3-3-3	8-8-9	13-13-13	15-15-16	19-19-20	22-22-23	24-24-25	26-26-27	30-30-30
	(ft) Sidewall	6-8-11	9-12-16	13-17-21	15-19-24	19-24-29	22-27-33	24-30-37	27-35-41	30-37-44
5 in.	Flow Rate (cfm/ft)	85	127	170	212	255	297	340	382	425
	Sound (NC)	-	-	17	23	29	34	38	42	46
	Throw Sill or Floor	4-4-4	10-10-10	14-14-14	17-17-17	21-21-22	24-24-24	27-27-27	29-29-29	32-32-32
	(ft) Sidewall	7-9-12	11-14-19	14-18-22	17-21-26	21-26-31	24-29-35	27-33-39	30-36-43	32-40-47
6 in.	Flow Rate (cfm/ft)	102	153	204	255	306	357	408	459	510
	Sound (NC)	-	-	17	23	29	34	38	42	46
	Throw Sill or Floor	5-5-5	10-10-10	15-15-15	19-19-19	23-23-23	25-25-25	28-28-29	31-31-31	35-35-35
	(ft) Sidewall	9-12-15	13-16-20	16-20-24	20-24-29	23-28-33	26-31-37	28-34-40	30-37-44	35-41-47

LBP/LBPH/LBM/LBMH
Linear Bar Grille

PERFORMANCE DATA

Heavy Duty Mandrel Linear Bar Grille (LBMH) – Core 15B

Size	Static Pressure (in. w.g.)	0.009	0.02	0.036	0.057	0.04	0.109	0.143	0.182	0.225
1 ½ in.	Flow Rate (cfm/ft)	12	18	24	30	36	42	48	54	60
	Sound (NC)	-	-	-	-	19	24	27	30	34
	Throw Sill or Floor	1-1-1	2-2-2	4-4-4	7-7-7	8-8-10	10-11-12	11-12-14	12-14-17	13-15-18
	(ft) Sidewall	2-4-6	4-7-10	6-9-13	7-12-17	8-13-19	10-16-22	11-17-24	12-19-26	13-21-28
2 in.	Flow Rate (cfm/ft)	19	29	39	49	59	69	78	88	98
	Sound (NC)	-	-	-	-	21	25	28	31	35
	Throw Sill or Floor	1-1-1	4-4-4	7-7-7	9-9-10	11-11-12	13-14-16	14-16-18	15-17-20	17-19-21
	(ft) Sidewall	3-5-7	5-8-12	7-11-16	9-14-20	11-17-23	13-19-26	14-21-28	15-23-30	17-25-33
2 ½ in.	Flow Rate (cfm/ft)	27	40	54	67	80	94	107	121	134
	Sound (NC)	-	-	-	-	20	25	29	32	35
	Throw Sill or Floor	1-1-1	5-5-5	8-8-8	10-10-11	13-14-15	15-16-17	17-18-20	19-20-21	21-22-23
	(ft) Sidewall	4-6-8	6-9-12	8-12-16	10-15-20	13-19-24	15-22-28	17-24-31	19-26-35	21-29-38
3 in.	Flow Rate (cfm/ft)	33	50	66	83	100	116	133	149	166
	Sound (NC)	-	-	-	17	21	26	31	36	40
	Throw Sill or Floor	2-2-2	7-7-7	10-10-11	12-13-15	15-16-17	18-19-20	20-22-23	23-23-23	25-25-25
	(ft) Sidewall	5-7-10	8-11-15	10-16-19	12-21-23	15-26-27	18-29-31	20-33-34	23-35-37	25-38-42
3 ½ in.	Flow Rate (cfm/ft)	40	60	80	99	119	139	159	179	199
	Sound (NC)	-	-	-	17	22	26	31	36	41
	Throw Sill or Floor	2-2-2	7-7-7	10-10-11	15-15-15	17-18-19	20-21-22	22-23-24	25-25-26	27-27-27
	(ft) Sidewall	5-7-10	8-11-15	12-16-20	15-19-24	17-22-27	20-25-31	22-28-35	25-32-39	27-34-42
4 in.	Flow Rate (cfm/ft)	53	79	106	132	159	185	212	238	264
	Sound (NC)	-	-	-	17	21	26	31	36	41
	Throw Sill or Floor	3-3-3	8-8-8	12-12-13	15-15-16	18-19-20	20-21-22	23-23-24	25-26-26	27-27-28
	(ft) Sidewall	6-8-11	9-12-16	12-16-20	15-20-25	18-23-28	20-26-32	23-29-36	25-32-40	29-36-44
5 in.	Flow Rate (cfm/ft)	66	99	132	165	198	231	264	297	330
	Sound (NC)	-	-	-	17	22	26	31	36	41
	Throw Sill or Floor	4-4-4	9-9-9	13-13-13	16-16-17	20-20-21	23-23-24	24-25-26	26-26-27	29-29-29
	(ft) Sidewall	7-9-12	10-13-17	13-17-21	16-21-26	20-25-30	22-28-34	24-30-37	28-35-42	31-38-45
6 in.	Flow Rate (cfm/ft)	79	118	157	197	236	275	314	354	393
	Sound (NC)	-	-	-	17	23	28	33	37	41
	Throw Sill or Floor	4-4-4	10-10-10	14-14-14	18-18-18	21-21-22	24-24-25	26-27-28	29-29-29	32-32-32
	(ft) Sidewall	8-10-13	11-14-18	15-19-23	18-22-27	21-26-31	24-29-35	26-33-40	29-36-43	32-39-46
7 in.	Flow Rate (cfm/ft)	92	138	184	230	276	322	368	414	460
	Sound (NC)	-	-	-	17	23	28	33	37	41
	Throw Sill or Floor	5-5-5	10-10-10	15-15-15	18-18-18	22-22-23	25-25-25	28-28-28	30-30-30	34-34-34
	(ft) Sidewall	9-11-14	13-16-20	16-20-24	20-24-28	23-27-32	25-30-36	28-33-39	31-37-43	35-41-47

Performance Notes

1. Tested in accordance with ASHRAE Standard 70 – 2023 Method of Testing for Rating the Performance of Air Outlets and Inlets.
2. Airflow is in cubic feet per minute [cfm].
3. NC, sound pressure levels, are based on a room absorption of 10 dB re 10-12 Watts, and a 10 ft active section. The NC correction values for other lengths are listed in the table below.

NC Correction for Length

Active Length, ft	1	2	4	6	8	10	15	20	25	30
Correction	+10	+7	-4	-2	-1	0	+2	+3	+4	+5

4. When used as a return air intake, the NC value given in the performance table will be increased by 4. For return air application, the negative static pressure will be 0.8 times the static pressure value as shown in the performance table.
5. Blanks "-" indicate an NC level below 15.
6. All pressures are in inches of water column [in. w.g.].
7. Pressures not listed can be calculated using the following formula:
   Ptotal = Pstatic + Pvelocity
8. Throw values are measured in feet for terminal velocities of:
   150 fpm (minimum)
   100 fpm (middle)
   50 fpm (maximum)
9. These throw values are based on a 4 ft active section of grille with a cooling temperature differential of 20°F. The multiplier factors listed in the table below are applicable for other lengths.

Throw Correction for Length (Multiply)

Active Length, ft	Terminal Velocity 150 fpm	100 fpm	50 fpm
1 ft	0.5	0.6	0.7
10 ft, or Continuous	1	1.4	1.2

10. 1/2" core spacing (15B, 16B, 25B, 26B, 27B) not for use in floor applications.

LBP/LBPH/LBM/LBMH
Linear Bar Grille

PERFORMANCE DATA

Heavy Duty Mandrel Linear Bar Grille (LBMH) Core 27B/27C

Size	Static Pressure (in. w.g.)	0.012	0.026	0.048	0.076	0.107	0.145	0.191	0.242
1 ½ in.	Flow Rate (cfm/ft)	13	19	26	32	39	45	51	58
	Sound (NC)	-	16	24	31	36	41	45	48
	Throw Sill or Floor	1-1-1	2-2-2	4-4-4	6-6-6	8-8-9	9-10-11	10-11-13	12-13-15
	(ft) Sidewall	2-4-6	4-7-10	6-9-13	7-11-16	8-13-19	9-15-21	10-16-23	12-18-25
2 in.	Flow Rate (cfm/ft)	19	29	38	48	58	67	77	86
	Sound (NC)	-	20	26	31	36	40	43	46
	Throw Sill or Floor	1-1-1	4-4-4	6-6-6	9-9-9	11-11-12	12-13-15	14-15-17	15-17-19
	(ft) Sidewall	3-5-7	5-8-11	7-11-15	9-14-19	11-16-22	12-18-25	14-20-27	15-22-30
2 ½ in.	Flow Rate (cfm/ft)	27	40	54	67	81	94	107	121
	Sound (NC)	-	20	26	31	36	40	43	46
	Throw Sill or Floor	1-1-1	5-5-5	8-8-8	10-10-11	13-14-15	15-16-17	16-18-20	20-20-21
	(ft) Sidewall	4-6-8	6-9-12	8-12-16	10-15-20	13-19-24	14-20-26	17-23-30	19-26-33
3 in.	Flow Rate (cfm/ft)	40	60	80	99	119	139	159	179
	Sound (NC)	-	20	26	31	36	40	43	46
	Throw Sill or Floor	2-2-2	7-7-7	10-10-11	12-13-15	15-16-17	18-19-20	20-21-22	23-23-23
	(ft) Sidewall	4-6-9	7-10-13	9-13-17	12-16-21	15-20-25	18-23-30	20-27-33	23-30-37
3 ½ in.	Flow Rate (cfm/ft)	54	81	108	135	162	189	216	243
	Sound (NC)	-	20	26	31	36	40	43	46

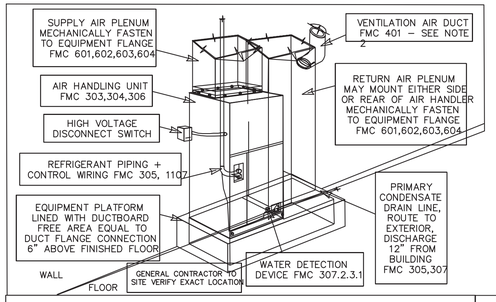

AIR HANDLER / VERTICAL + R/A RISER DETAIL | N.T.S

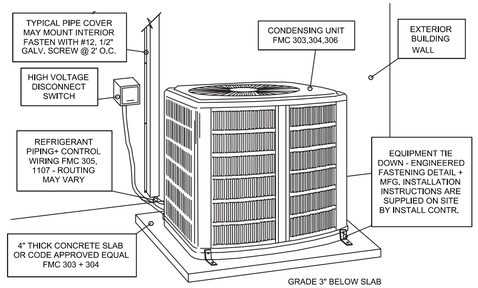

CONDENSER / SLAB DETAIL | N.T.S

OPTION	DUCT ZONING CONTROL SYSTEM

THIS OPTION IS DESIGNED IN ACCORDANCE WITH MANUAL ZR HVAC ZONE DESIGN GUIDE. ZONING PROVIDES MULTIPLE THERMOSTAT CONTROLLERS ON A SINGLE HVAC SYSTEM CONTROLLED BY A SINGLE BRAIN (OR CONTROL PANEL). THIS OPTION IS RECOMMENDED FOR EVERY BUILDING OWNER WHO REQUIRES BETTER TEMPERATURE CONTROL, A LOWER OPERATING COST, A LOWER UPFRONT HVAC COST (WHEN COMPARED TO MULTIPLE HVAC SYSTEMS), THE ABILITY TO MEET THE THERMAL ZONE PEAK HOUR LOAD, AND FOR BUILDINGS THAT DON'T HAVE ADEQUATE EXPOSURE DIVERSITY. THIS ZONE CONTROL SYSTEM IS A MINIMUM REQUIREMENT WHEN SERVING MORE THAN ONE LEVEL OF A BUILDING FROM A SINGLE HVAC SYSTEM, FOR BUILDINGS THAT HAVE VARIABLE OCCUPANCIES OR VARIABLE USAGE, AND FOR OCCUPANTS WHO PREFER DIFFERENT TEMPERATURES THROUGHOUT THE BUILDING. HVAC ZONE CONTROL SYSTEMS CAN EASILY BE ADDED TO A STANDARD "CODE MINIMUM" HVAC SYSTEM PROVIDING UP TO 30 THERMOSTATS PER HVAC SYSTEM - A HUGH BENEFIT WHEN COMPARED TO A STANDARD HVAC SYSTEM CONTAINING JUST 1 THERMOSTAT CAPABLE OF SENSING ONLY THE ROOM IT'S MOUNTED IN. ZONE CONTROL PANELS MONITOR EACH THERMAL ZONE TEMPERATURE AND PROVIDES CONDITIONED AIR TO EACH THERMAL ZONE OF THE BUILDING WHEN AND IF NEEDED. HVAC INSTALLER MUST INSTALL THE SYSTEM IN ACCORDANCE WITH MANUAL ZR.

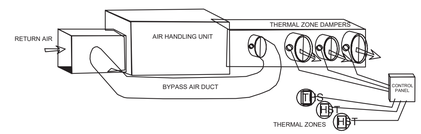

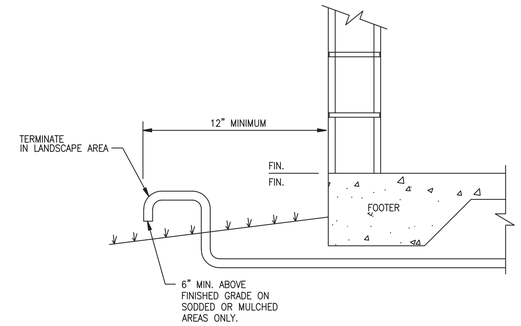

CONDENSATE & WATER HEATER OVERFLOW
DISCHARGE TERMINATION DETAIL
SCALE: N.T.S.

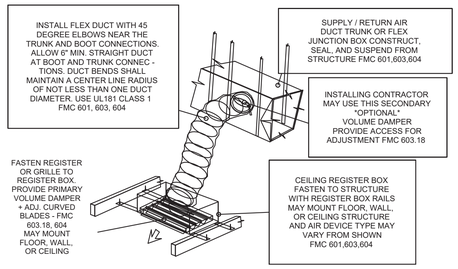

DUCTBOARD / FLEX DUCT DETAIL | N.T.S

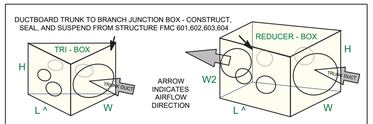

RECTANGULAR JUNCTION BOXES IN COMPLIANCE WITH GROUP 11 DESIGN RULES ALSO ACCEPTABLE.
^ = SEE MANUAL D GROUP 11 EL VALUES, COMPLY WITH RULES 2D, L=2xD FOR BRANCH DUCT EXITS.
* = END CAP SIZE EQUALS TRUNK DUCT SIZE + 2" / OR MODIFY TO FIT STRUCTURE / 700 FPM MAX.
ADJUST LENGTH FOR MULTIPLE BRANCH DUCTS / OR MODIFY TO FIT STRUCTURE / 700 FPM MAX.

TRUNK DUCT SIZE	DIMENSIONS - INCHES		
	W	H	L
6 - 12	13	13	^
14,16	17	17	^
18,20	21	21	^

SEE HVAC DRAWING TRUNK DUCT SIZES AND QTY.

TRUNK DUCT SIZE	DIMENSIONS - INCHES			
	W	H	L	W2
6 - 12	13	13	^	*
14,16	17	17	^	*
18,20	21	21	^	*

FLEX DUCT JUNCTION BOX DETAIL | N.T.S

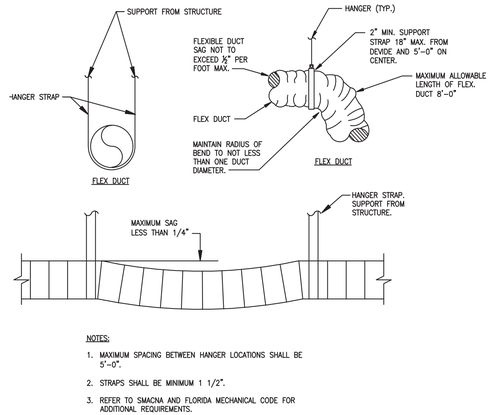

NOTES:

1. MAXIMUM SPACING BETWEEN HANGER LOCATIONS SHALL BE 5'-0".
2. STRAPS SHALL BE MINIMUM 1 1/2".
3. REFER TO SMACNA AND FLORIDA MECHANICAL CODE FOR ADDITIONAL REQUIREMENTS.

FLEX DUCT HANGER DETAIL
SCALE: N.T.S.

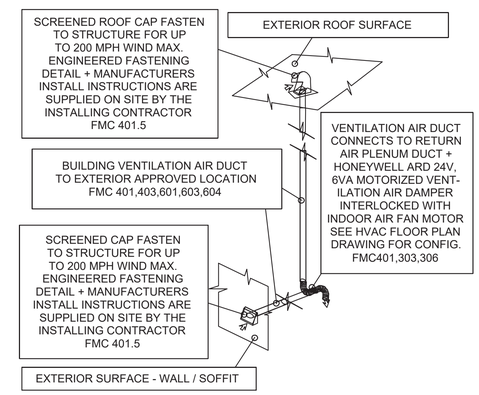

OPTION	VENTILATION AIR DETAIL	N.T.S

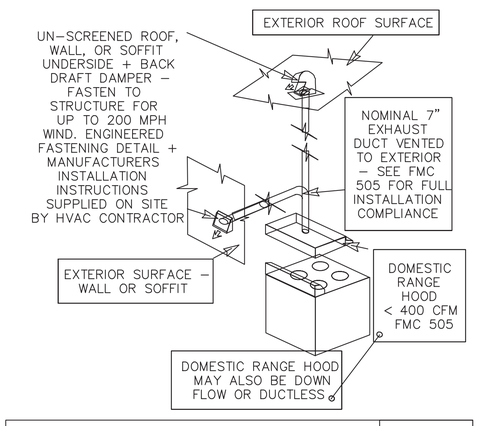

HOOD EXHAUST DETAIL | N.T.S

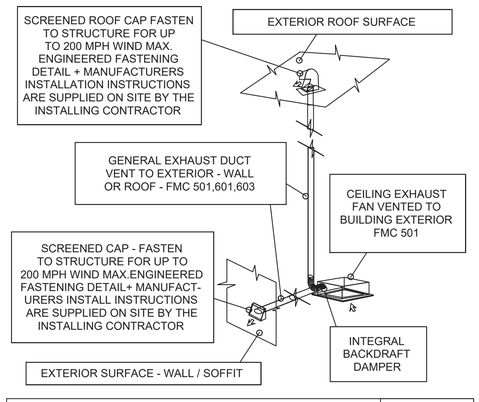

EXHAUST FAN DETAIL | N.T.S

ALL THE DESIGN AND DETAILS ON THIS PLAN ARE THE PROPERTY OF LIGHTNING ENGINEERING AND SHALL NOT BE USED, COPIED OR REPRODUCED WITHOUT THE WRITTEN PERMISSION OF LIGHTNING ENGINEERING.

I HEREBY CERTIFY AS THE BUILDING DESIGN ENGINEER OF RECORD, THAT THE BUILDING DESIGN AS SHOWN ON THESE PLAN AND AS ACCOMPANIED BY DESIGN & SUPPORT DOCUMENTS COMPLIES WITH THE 2017 NDS. THIS CERTIFICATION DOES NOT INCLUDE ROOF TRUSS COMPONENTS OF WHICH THE TRUSS DESIGN ENGINEER IS THE ENGINEER OF RECORD. THE TRUSS DESIGN DRAWINGS SHALL BE PROVIDED TO THE BUILDING CODE WITH SUPPLEMENTS.

LIGHTNING ENGINEERING
4161 TAMIAMI TRAIL UNIT 101.
PORT CHARLOTTE, FL 33980
PH: 941-979-3505
FAX: 941-979-8195

PROJECT NAME & ADDRESS:

NOVA PARKS
46442 PARK CHALET PL, STERLING, VIRGINIA, 20165
MARC O'GRADY DESIGN

No.	Description	Date
1		
2		
3		
4		
5		

DRAWN BY: PLC
REVISED BY: JPP
PROJECT NO: 26 173 78

SHEET TITLE:
MECHANICAL DETAILS

SHEET NUMBER:
MD-100

PLUMBING LEGEND	
—— - ——	DCW–DOMESTIC COLD WATER
—— - - ——	DHW–DOMESTIC HOT WATER
—— - - - ——	DHC–DOMESTIC HOT WATER RECIRCULATION
WV	WATER VALVE
R	RECIRCULATION PUMP

Water Supply Fixture Units

Input Cells

Predominant Supply Systems: Flush Tank; Flushometer Valve

Tag	Pipe[1] Size	Fixture Type	Occupancy	Type of Supply Control	Number of Fixtures		Load Value		WSFU
	[2]	Full-Bath Group	Private	Flush Tank	2	x	3.60	=	7.20
HB	1/2	Hose Bib	Private	Faucet	1	x	0.25		0.25
REF	1/2	Refrigerator	Private	Faucet	1	x	0.25		0.25
DW	1/2	Dishwashing Machine	Private	Automatic	1	x	1.40	=	1.40
S	1/2	Kitchen Sink	Private	Faucet	1	x	1.40	=	1.40
						Total WSFU:			**10.50**
						Domestic Demand [1]:			**15.00** GPM

NOTES

1- PIPE SIZE (INCH)

PLUMBING WATER HEATER (ELECTRICAL) SCHEDULE

TAG	ELECTRICAL DATA MCA AMPS	ELECTRICAL DATA MOCP AMPS	VOLTAGE	HYDRONIC REQUIREMENTS STORAGE CAPACITY GALLONS	BASIS OF DESIGN* MANUFACTURER	BASIS OF DESIGN* MODEL OR SERIES	OPERATING WEIGHT LBS	NOTES
WH	24	30	240/1/60	50	RHEEM	ES50–6	320	

* OR SIMILAR MANUFACTURER

NOTES LEGEND

1	CONNECT TO EXISTING DCW LINE.

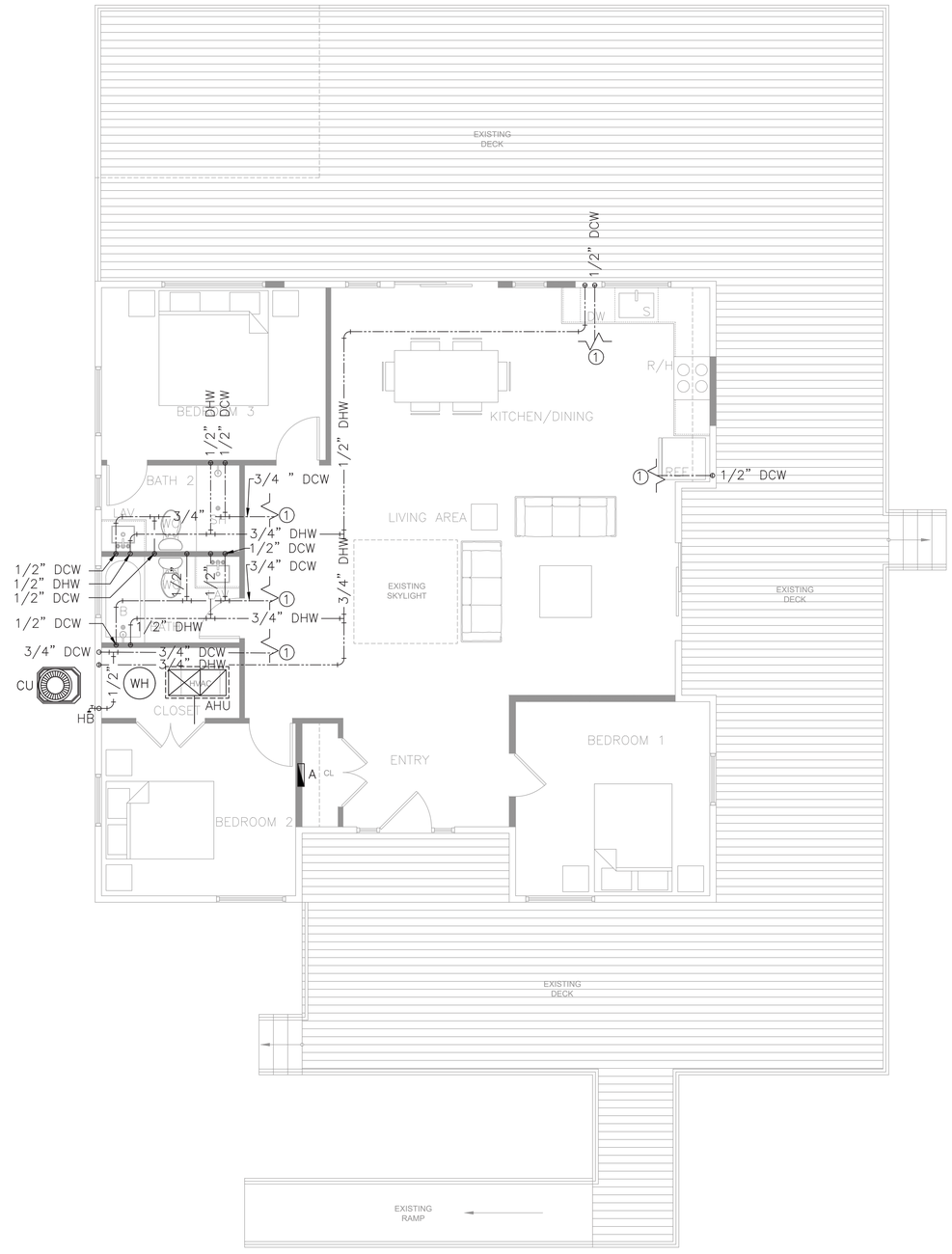

DOMESTIC WATER PLAN

1/4" = 1'-0"

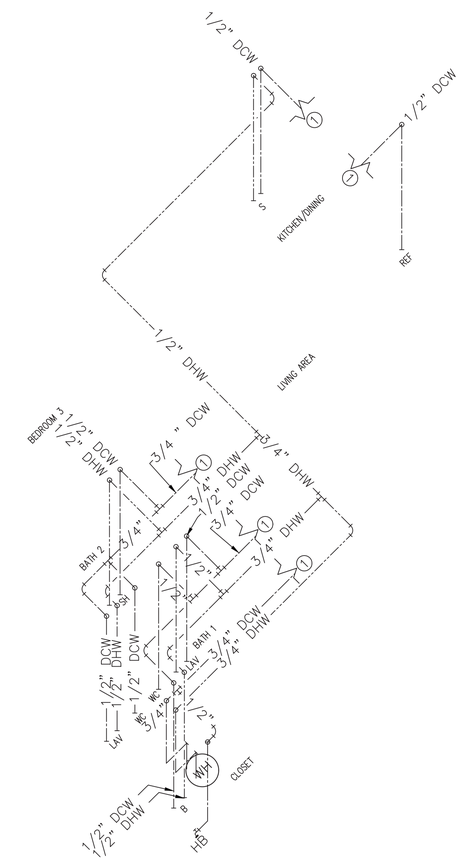

DOMESTIC WATER ISOMETRIC VIEW

N.T.S

ALL THE DESIGN AND DETAILS ON THIS PLAN ARE THE PROPERTY OF LIGHTNING ENGINEERING AND SHALL NOT BE USED, COPIED OR REPRODUCED WITHOUT THE WRITTEN PERMISSION OF LIGHTNING ENGINEERING.

I HEREBY CERTIFY AS THE BUILDING DESIGN ENGINEER OF RECORD, THAT THE BUILDING DESIGN AS SHOWN ON THESE PLAN AND AS ACCOMPANIED BY DESIGN & SUPPORT DOCUMENTS COMPLIES TO THE BUILDING CODE. THIS CERTIFICATION DOES NOT INCLUDE ROOF TRUSS COMPONENTS OF WHICH THE TRUSS DESIGN ENGINEER IS THE ENGINEER OF RECORD. THE TRUSS DESIGN DRAWINGS SHALL BE PREPARED TO COMPLIANCE WITH THE BUILDING CODE WITH SUPPLEMENTS.

LIGHTNING ENGINEERING
4161 TAMIAMI TRAIL UNIT 101.
PORT CHARLOTTE, FL 33980
PH. 941-639-9001
FAX. 941-979-8195

PROJECT NAME & ADDRESS:

NOVA PARKS

46442 PARK CHALET PL, STERLING, VIRGINIA, 20165

MARC O'GRADY DESIGN

No.	Description	Date
1		
2		
3		
4		
5		

DRAWN BY: PLC

REVISED BY: JPP

PROJECT NO: 26 173 78

SHEET TITLE:

PLUMBING PLAN

SHEET NUMBER:

P-100

FIXTURE LEGEND & CONNECTION SIZE (INCH)						
LEGEND	FIXTURE TYPE	QTY	SAN	MIN.TRAP SIZE	DFU	TOTAL (DFU)
B	BATHTUB	1	3		2	2
SH	SHOWER	1	2	1	2	2
LAV	LAVATORY	2	2	1 1/4	1	2
S	KITCHEN SINK	1	2	1 1/2	2	2
DW	DISHWASHING MACHINE	1	2	1 1/2	2	2
WC	WATER CLOSET	2	3	3	3	6
VTR	VENT THROUGH ROOF					
AAV	AIR ADMITTANCE VALVE					
						16

* TOTAL DFU REQUIRES DRAINAGE PIPE DIAMETER 4" AND 1/8" SLOPE PER TABLE 710.1

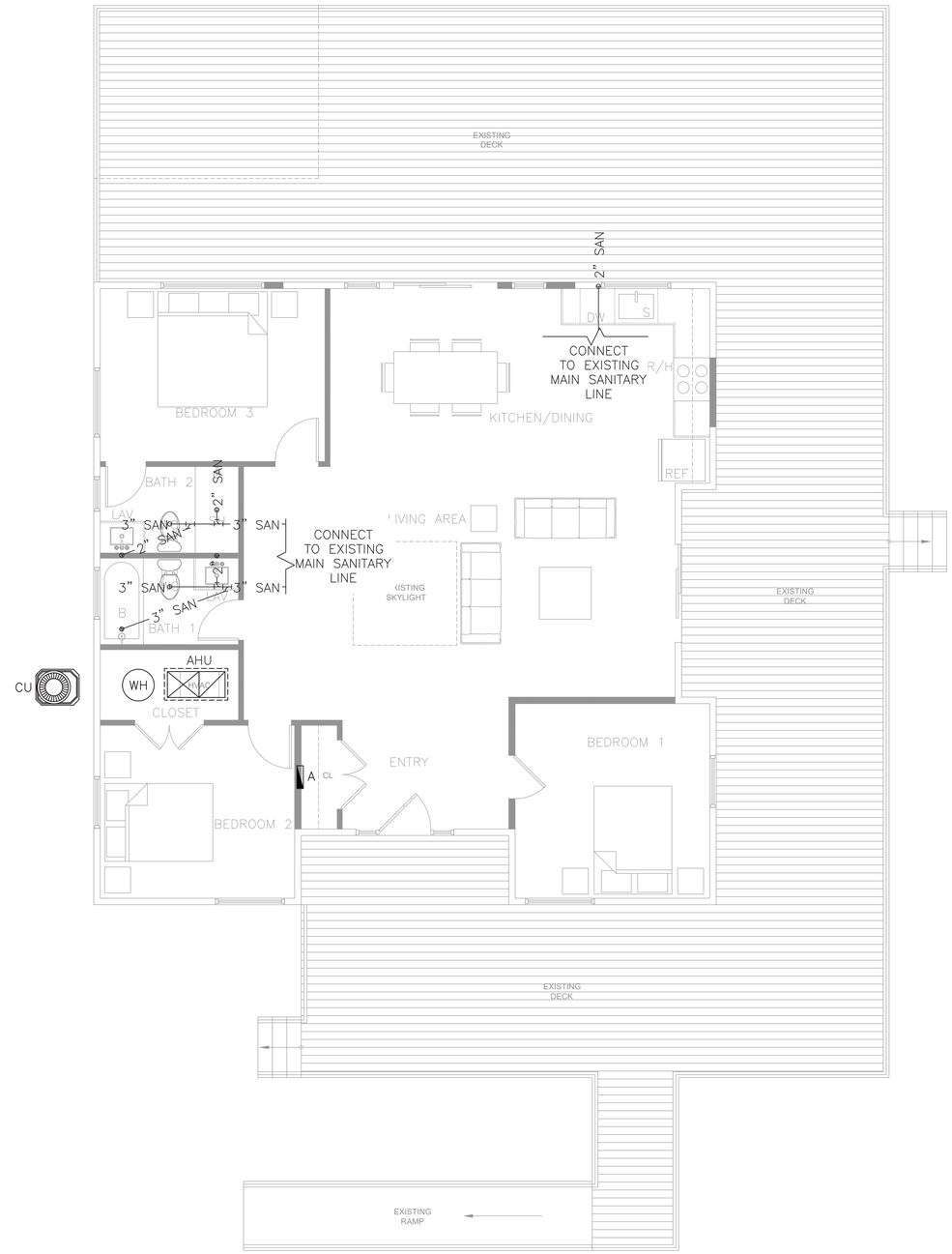

SANITARY SEWER PLAN

1/4" = 1'-0"

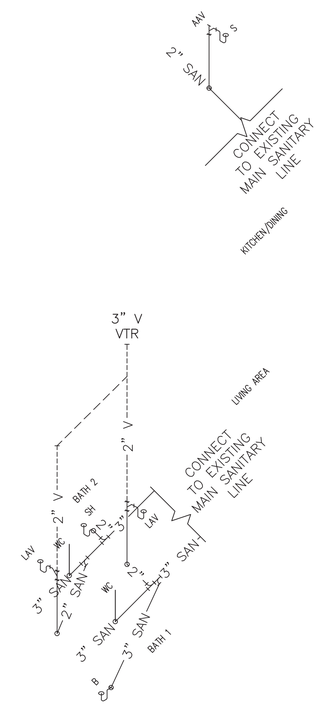

SANITARY SEWER ISOMETRIC VIEW

N.T.S

ALL THE DESIGN AND DETAILS ON THIS PLAN ARE THE PROPERTY OF LIGHTNING ENGINEERING AND SHALL NOT BE USED, COPIED OR REPRODUCED WITHOUT THE WRITTEN PERMISSION OF LIGHTNING ENGINEERING.

I HEREBY CERTIFY AS THE BUILDING DESIGN ENGINEER OF RECORD, THAT THE BUILDING DESIGN AS SHOWN ON THESE PLAN AND AS ACCOMPANIED BY DESIGN & SUPPORT DOCUMENTS COMPLIES TO THE BUILDING CODE. THIS CERTIFICATION DOES NOT INCLUDE ROOF TRUSS COMPONENTS OF WHICH THE TRUSS DESIGN ENGINEER IS THE ENGINEER OF RECORD. THIS PLAN WILL BE PERFORMED TO COMPLIANCE WITH THE BUILDING CODE WITH SUPPLEMENTS.

LIGHTNING ENGINEERING
4161 TAMIAMI TRAIL UNIT 101.
PORT CHARLOTTE, FL 33980
PH. 941-979-0900
FAX. 941-979-8195

PROJECT NAME & ADDRESS:

NOVA PARKS

46442 PARK CHALET PL, STERLING, VIRGINIA, 20165

MARC O'GRADY DESIGN

No.	Description	Date
1		
2		
3		
4		
5		

DRAWN BY: PLC

REVISED BY: JPP

PROJECT NO: 26 173 78

SHEET TITLE:

PLUMBING PLAN

SHEET NUMBER:

P-101

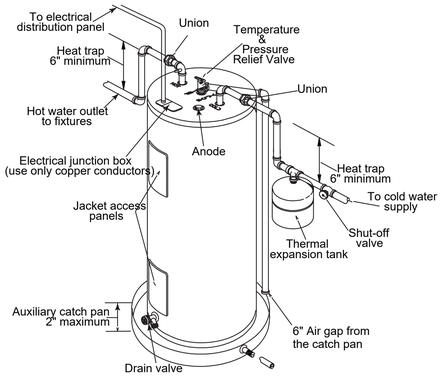

TYPICAL WATER HEATER DETAIL

SCALE: NTS

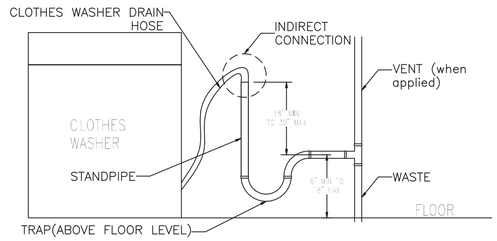

WASHER INDIRECT DRAIN CONNECTION

PROVIDE STANDPIPE IN ALL CLOTHES WASHER MACHINE.

SCALE:
N.T.S

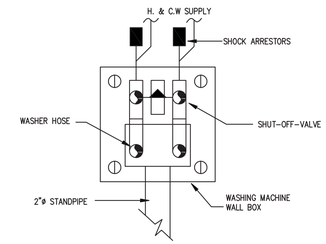

WASHER MACHINE BOX DETAIL

SCALE: NTS

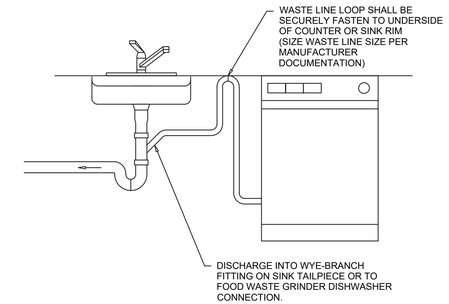

RESIDENTIAL DISHWASHER WASTE CONNECTION

N.T.S.

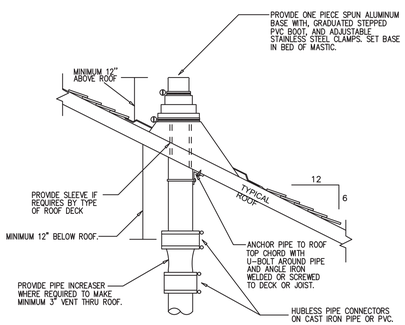

REFER TO PLANS FOR VTR PIPE SIZES AND LOCATIONS. LOCATE VENT THRU ROOF MINIMUM TEN FEET HORIZONTAL OR THREE FEET VERTICAL ABOVE ANY BUILDING OPENING OR FRESH AIR INTAKE, AND ONE FOOT FROM ANY VERTICAL SURFACE. PROVIDE 1" FIBERGLASS INSULATION WITH ALL-SERVICE JACKET ON VENT PIPE INSIDE BUILDING WITHIN SIX FEET OF VENT THRU ROOF LOCATION. VERIFY FLASHING AND COUNTER FLASH WITH ROOFING CONTRACTOR.

VENT THRU ROOF (VTR) DETAIL

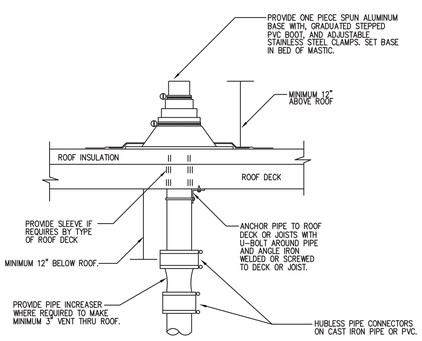

REFER TO PLANS FOR VTR PIPE SIZES AND LOCATIONS. LOCATE VENT THRU ROOF MINIMUM TEN FEET HORIZONTAL OR THREE FEET VERTICAL ABOVE ANY BUILDING OPENING OR FRESH AIR INTAKE, AND ONE FOOT FROM ANY VERTICAL SURFACE. PROVIDE 1" FIBERGLASS INSULATION WITH ALL-SERVICE JACKET ON VENT PIPE INSIDE BUILDING WITHIN SIX FEET OF VENT THRU ROOF LOCATION. VERIFY FLASHING AND COUNTER FLASH WITH ROOFING CONTRACTOR.

VENT THRU ROOF (VTR) DETAIL

OPTION #1 WHEN THE VALVE IS LOCATED IN A WALL RECESS BOX, A REMOVABLE LOUVER SHALL BE INSTALLED FOR VENTILATION, ACCESS AND INSPECTION

OPTION #2 THE VALVE MAY BE LOCATED ON A DOUBLE SHORT VERTICAL OFFSET BELOW THE FLOOD LEVEL RIM OF THE FIXTURE BEING SERVED

OPTION #3 THE VALVE MAY BE LOCATED ON THE HORIZONTAL FIXTURE DRAIN ARM A MINIMUM OF FOUR INCHES ABOVE THE FIXTURE TRAP

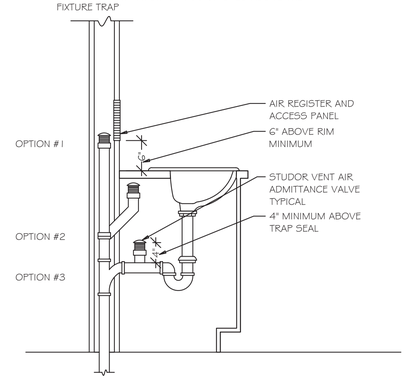

AIR ADMITTANCE VALVE (AAV) DETAIL

NTS

NOTES:
1. APPLY SOLID BEAD OF ROOF MASTIC JUST ABOVE THE ROOF JACK.
2. SLIDE STORM COLLAR DOWN MAKING SURE THE COLLAR IS COMPLETELY SEATED IN MASTIC & THERE ARE NO VOIDS.
3. WHEN COLLAR IS IN FINAL POSITION APPLY FINAL BEAD OF MASTIC AROUND TOP OF STORM COLLAR

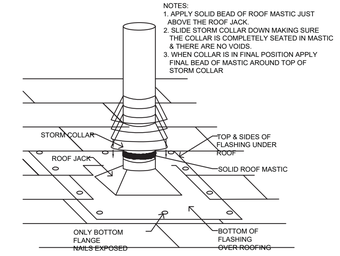

VENT PIPE PENETRATION

SCALE: N.T.S.

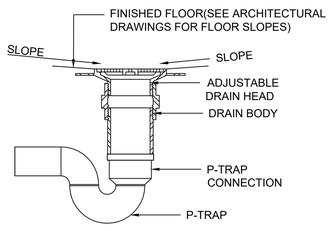

FLOOR DRAIN DETAIL

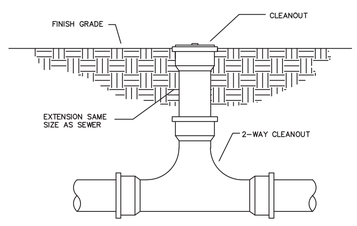

NOTE: PIPE AND FITTING SHALL BE OF THE SAME MATERIAL AS SEWER IT SERVES.

EXTERIOR TWO-WAY CLEANOUT

NOT TO SCALE

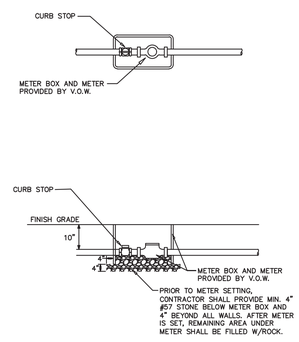

V.O.W. CONSTRUCTION STANDARDS & DETAILS

METER AND METER BOX INSTALLATION

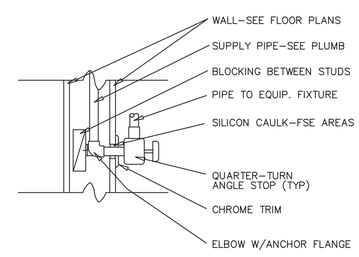

FIXTURE SHUT-OFF VALVE

NOT TO SCALE

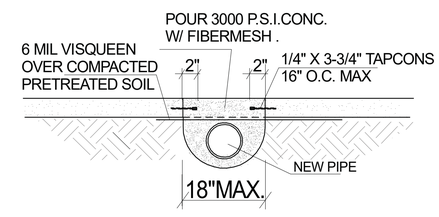

SLAB REPAIR DETAILS

ALL THE DESIGN AND DETAILS ON THIS PLAN ARE THE PROPERTY OF LIGHTNING ENGINEERING AND SHALL NOT BE USED, COPIED OR REPRODUCED WITHOUT THE WRITTEN PERMISSION OF LIGHTNING ENGINEERING.

I HEREBY CERTIFY AS THE BUILDING DESIGN ENGINEER OF RECORD, THAT THE BUILDING DESIGN AS SHOWN ON THESE PLAN AND AS ACCOMPANIED BY DESIGN & SUPPORT DOCUMENTS COMPLIES WITH THE BUILDING CODE. THIS CERTIFICATION DOES NOT INCLUDE ROOF TRUSS COMPONENTS OF WHICH THE TRUSS DESIGN ENGINEER IS THE ENGINEER OF RECORD. THE TRUSS DESIGN DRAWINGS ARE EXPECTED TO COMPLIANCE WITH THE BUILDING CODE WITH SUPPLEMENTS.

LIGHTNING ENGINEERING
4161 TAMIAMI TRAIL UNIT 101.
PORT CHARLOTTE, FL 33980
PH. 941-979-3100
FAX. 941-979-8195

PROJECT NAME & ADDRESS:

NOVA PARKS

46442 PARK CHALET PL, STERLING, VIRGINIA, 20165

MARC O'GRADY DESIGN

No.	Description	Date
1		
2		
3		
4		
5		

DRAWN BY:	PLC
REVISED BY:	JPP
PROJECT NO:	26 173 78

SHEET TITLE:

PLUMBING DETAILS

SHEET NUMBER:

PD-100

PLUMBING PROVISIONS

SECTION 15400 – PLUMBING

1. SCOPE OF WORK

Provide all labor, materials, tools, transportation, and services necessary to complete the plumbing system installation as described in these specifications, as illustrated on the drawings, or as directed by the Architect.
Install all hot- and cold-water systems, including complete connections from the water meter to all plumbing fixtures and any equipment requiring water connections. These systems shall include controls, valves, equipment, devices, and insulation.

Furnish and install all soil, waste, and vent systems, both inside and outside of the building, with sewer connections to the municipal system as indicated on the drawings.

Provide and set all plumbing fixtures, including all required trim, supports, and accessories.

Perform trenching, pipe bedding, backfilling, compaction, and soil treatment as required.

Complete all rough-in and final connections for equipment, fixtures, and service areas as indicated on the drawings, including necessary traps and miscellaneous items. Coordinate all work with the Owner.
Provide all final plumbing connections to heating and air-conditioning equipment, including condensate drains, indirect waste, and gas piping as required.

Meters and Utility Connections:

Water: Coordinate all work with the local water utility. Furnish any labor and materials not provided by the utility and required to connect to the existing line or meter. Install all permanent water supply lines from the point of connection in accordance with local utility requirements. Tap fees are paid by the Owner (if required).
Sewer: Coordinate all work with the local utility. Perform all work and furnish all materials in strict accordance with local requirements. Tap fees are paid by the Owner (if required).

Gas: Coordinate with the local gas utility and provide all labor and materials (not provided by the utility) required to supply a working system for the Owner, including meter and/or regulator. Furnish a complete system from the tapping point to and within the building as shown on the drawings. Tap fees are paid by the Owner.

2. SHOP DRAWINGS

Submit a complete sets of shop drawings in accordance with Section 01300 to the building department at the time of plan review. These drawings shall include all plumbing fixtures, trim, drains, cleanouts, piping, valves, insulation, hangers, supports, equipment, and devices proposed for use.

3. PRODUCT HANDLING

In the event of damage, make all necessary repairs or replacements immediately, to the satisfaction of the Owner.

4. EXAMINATION OF THE SITE

All contractors submitting proposals for this work shall examine the site and note all conditions, including applicable local regulations. Proposals shall reflect all conditions affecting the work under this contract.

5. GUARANTEE

All work performed under this section shall be guaranteed free from defective materials and workmanship.
Upon notification by the Owner or Architect, of any failure in guaranteed equipment within the warranty period, the Contractor shall promptly replace any defective part(s).

6. MATERIALS

A- Soil, Waste, and Vent Piping

Below Floor to 5'-0" Outside Building and Yard Piping: Use A.B.S. or P.V.C. Schedule 40 pipe and fittings if approved by the local authority, or standard-weight coated cast-iron soil pipe with cast-iron/neoprene gasket fittings in compliance with one of the standards listed in Table 702.2 of the International Plumbing Code (IPC). Where piping is installed under driveways or parking areas with superimposed loads, service-weight cast-iron soil pipe with cast-iron/neoprene gasket fittings shall be used.
Above Floor: Use A.B.S. or P.V.C. Schedule 40 (if approved by local authority), or standard-weight coated cast-iron pipe with neoprene rubber gaskets, or hubless cast-iron pipe with neoprene rubber gaskets and stainless-steel clamps (Clamp-All or equal) in compliance with the standards in Table 702.1 of the IPC.
B- Hot and Cold Water Piping

Above Floor or Underground: Use Corzan CPVC Schedule 80 conforming to Tables 605.3 and 605.4 of the IPC, based on intended service. All hot-water distribution pipe and tubing shall have a minimum pressure rating of 100 psi at 180°F. All fittings and connections shall conform to NSF 61 and one of the standards in Table 605.5 of the IPC.

Coordinate with the manufacturer and install expansion loops per their standards. Approved manufacturers include +GF+, IPEX, NIBCO, CEPEX, FIP Durman, Vycom, and Asung.

C- Condensate Drain Piping

Condensate drain piping shall be Corzan CPVC Schedule 80 from HVAC units and other equipment unless otherwise noted.

D- Indirect Waste Piping

Unless otherwise indicated, provide Schedule 40 piping. Slope drainage pipe in accordance with IPC Table 704.1:

2-1/2" or smaller: 1/4" per foot

3" to 6": 1/8" per foot

8" or larger: 1/16" per foot

E. Natural Gas Piping

Provide gas piping, including tap and service. Coordinate meter location with the local authority.

Underground gas piping shall be Schedule 40 black steel pipe with long-radius steel welding fittings, protected with Trantex wrapping tape (or equivalent) per manufacturer's recommendations.
Gas piping above ground shall be Schedule 40 black steel with 125 lb. black malleable iron screwed fittings, supported at intervals not exceeding 8'-0" and at each change in direction.

Gas pipe joint compound shall comply with NFPA 54 and local codes, suitable for natural gas service.
Provide moisture traps on each drop to the water heater and any kitchen equipment.

Support piping in accordance with Sections 407 and 415 of the International Building Code – Fuel Gas (IBC).
F. Storm Drain Leaders

Storm drain piping shall be the same materials as for soil, waste, and vent piping, per above paragraphs.
G. Insulation

Insulate all water pipes, rain leaders, etc., to prevent heat loss and condensation (when applicable).
Piping in unconditioned spaces shall be protected against freezing (when applicable).

Use minimum 1" thick foam insulation with a conductivity not exceeding 0.28 BTU per inch/hr/ft²/°F (per IECC, Section C404.4 and IPC, Section 607.5).

Insulation shall be Armaflex by Armstrong or approved equal.

Seal all butt ends and longitudinal joints with rubber-based adhesive.

PLUMBING PROVISIONS CONTINUE

7. FIXTURES

A. Refer to drawings for fixture specifications.

8. FLASHINGS

A. Provide watertight flashing for all piping and vents passing through the roof, using six-pound-per-square-foot lead sleeves. The sleeve base shall extend at least 12 inches in each direction beyond the outside diameter of the pipe.
B. Turn the sleeve down a minimum of 1-1/2 inches into the top of the vent pipe, fitting the lead snugly inside the pipe.
C. Gas vent caps shall be vandal-proof and flashed similarly.
D. Confirm approved flashing materials and methods with the Roofing Contractor.

9. CLEANOUTS

A. Refer to drawings for cleanouts specifications.

10. EQUIPMENT

A. Water Heater

Furnish and install the water heater(s) as indicated on the drawings (gas or electric).

Provide all temperature and safety controls, including ASME- and ANSI Z21.22-rated temperature and pressure relief valve, gas pressure regulator (if required), drain valve, and expansion tank, as applicable.
Provide water, gas, and relief line connections with shutoff valves and dielectric unions in water and gas lines.

B. Valves, Cocks, and Faucets

Unless noted otherwise, all valves shall be rated for a minimum of 160 psi working pressure and shall comply with IPC Section 606. Valves shall be compatible with the piping material and have rising stems with back seats for repacking under pressure (where applicable). All materials shall conform to lead content standards of Section 605.7, IPC. Acceptable manufacturers include Stockham, Walworth, Lunkenheimer, Scott, Hammond, Crane, or Watts (or similar approved manufacture).

Gate valves shall be compatible with the piping system, and any supplying drinking water must meet NSF 61.
Provide chrome-plated angle stop valves with soft annealed chrome-plated copper supply tubes and escutcheons for lavatories, tank-type water closets, sinks, and water coolers.

Gas cocks: See drawings for all equipment requiring gas shutoff cocks.

Exterior hose bibbs/valves shall be non-freeze type, with supply shutoff valves if noted.

C. Bathtub

Temperature limiting devices shall be provided for bathtub as per P2713.3

11. EXECUTION

A. Piping

Conceal all piping unless otherwise shown on the drawings.

Install valves, traps, cleanouts, and other apparatus in easily accessible locations.

Slope soil and waste lines in accordance with IPC Table 704.1: 1/4" per foot for pipes 2-1/2" and under; 1/8" per foot for pipes 3" to 6", unless otherwise indicated or required by local codes.

Separate hot and cold water lines by at least 6" when run in parallel.

Run all water lines overhead and down partition walls unless no wall is available. In such cases, run lines under the slab to the point of termination.

B. Hangers and Supports

Support gas piping at intervals not exceeding 8'-0" and at each change of direction with steel pipe hangers (e.g., Grinnell or Fee & Mason). Attachment to structure shall comply with IBC Sections 407 and 415.
Hanger rods shall be standard steel bolt stock, 3/8" minimum diameter.

All underground piping shall be firmly bedded, with bell holes provided at each bell. Install piping in a graded trench, and excavate/backfill per the requirements in these specifications.

Indoor Finishes

Hangers and clamps supporting bare copper piping shall be coated with copper-colored epoxy paint (B-Line Dura-Copper®). Where necessary, add an additional PVC coating.

Hangers for other pipe types shall be zinc-plated (ASTM B633) or have an electro-deposited green epoxy finish (B-Line Dura-Green®).

Strut channels shall be pre-galvanized (ASTM A653 SS Grade 33 G90) or have an electro-deposited green epoxy finish (B-Line Dura-Green®).
Outdoor/Corrosive Environments

Hangers and strut for outdoor applications shall be hot-dip galvanized post-fabrication (ASTM A123).
All associated hardware shall be hot-dip galvanized or stainless steel; zinc plating is not acceptable outdoors or in corrosive areas.
In corrosive areas, hangers and strut shall be Type 304 [316] stainless steel with stainless hardware.

C. Plumbing Fixtures

Furnish and install all plumbing fixtures complete with necessary fittings, trim, and accessories.

D. Tests

The permit holder shall conduct all applicable tests prescribed in Sections 312.2 through 312.10 of the IPC to confirm code compliance.

All plumbing system piping shall be tested with water or (for non-plastic piping) by air.

E. Cleaning and Protection

Remove all debris and leftover materials for which this Contractor is responsible. Clean all fixtures and equipment, and repair any blemishes to the finish. Replace any fixtures damaged due to improper protection during installation.
Flush out new piping with chlorine or HTH solution to remove foreign matter and sanitize, as required by local authorities and IPC Section 610.

F. Maintenance

Clean drain lines prior to project turnover.

GENERAL NOTES

1. It is the responsibility of the Plumbing Contractor to review both the plans and written specifications to understand the full scope of work. Coordinate with the Owner's representative for any requirements not specified herein but considered part of the contract. Visit the site to assess existing conditions.
2. Equipment in the kitchen requiring filtered, purified, or distilled water shall be identified by the Owner. Filters or R.O. system specifications shall be provided by the Owner. The contractor shall review these specifications and coordinate with the Owner to understand all system requirements and any additional locations needing service.
3. Lack of thorough understanding of existing conditions shall not excuse errors or omissions nor justify additional costs.
4. The Contractor shall field-measure and verify all dimensions and conditions before starting work.
5. All plumbing and gas installations shall conform to the latest editions of the following:

   Virginia Building Code – Residential, 2021

   Virginia Building Code – Building, 2021

   Virginia Building Code – Existing Building, 2021

   Virginia Building Code – Mechanical, 2021

   Virginia Building Code – Plumbing, 2021

   Virginia Building Code – Energy Conservation, 2021

   Virginia Building Code – Fuel Gas, 2021

   Virginia Fire Prevention Code, 2021

   NFPA (latest applicable editions)

   ASHRAE Standard 62.1
6. Piping layouts on the drawings are diagrammatic, showing general arrangement, size, and capacity only. All offsets are not necessarily shown. The Contractor shall furnish offsets, valves, vents, and fittings to avoid conflicts with other trades and structural/architectural elements as needed.
7. The Plumbing Contractor's scope includes all work indicated on these drawings.
8. Coordinate all piping routes with other trades before installation.
9. Verify invert elevations and the exact locations of existing sewers before installing new sewer connections.
10. Install isolation valves at each domestic water branch takeoff and unions at each equipment, fixture, or appliance service point per IPC Sections 606.1 and 606.2.
11. Maintain proper separation between sewer pipe and water service lines in accordance with IPC requirements and referenced tables.
12. Provide a drain pan with a proper drainage system under piping/ductwork located above any electrical panel.
13. Contractor to provide recirculation line if distance from water heater to furthest plumbing fixture exceeds 50'.

PLUMBING SYMBOLS LEGEND

ABBREVIATIONS:

AFF/AFG	ABOVE FINISHED FLOOR/GRADE
AHJ	AUTHORITY HAVING JURISDICTION
AS	ANGLE STOP
BFP	BACKFLOW PREVENTER
CO	CLEANOUT
ETR	EXISTING TO REMAIN
FPC	FIRE PROTECTION CONTRACTOR
FFCO/FGCO	FLUSH FLOOR/GRADE CLEANOUT
KEC	KITCHEN EQUIPMENT CONTRACTOR
GC	GENERAL CONTRACTOR
IW	INDIRECT WASTE
OC	ON CENTERS
MC	MECHANICAL CONTRACTOR
NFPA	NATIONAL FIRE PROTECTION ASSOCIATION
PC	PLUMBING CONTRACTOR
RI	ROUGH-IN
TYP	TYPICAL
VTR	VENT THRU ROOF
WCO	WALL CLEANOUT

LINETYPES:

	COLD WATER (CW)
	HOT WATER (HW)
	HOT WATER RETURN (HWR)
G	GAS LINE (G)
	PLUMBING VENT (V)
	PLUMBING VENT (V) - BELOW SLAB/GRADE
	SANITARY WASTE (SAN) - BELOW SLAB/GRADE
D	CONDENSATE (D)

GENERAL REFERENCES/NOTATIONS:

	CONNECT TO EXISTING
#	KEY NOTE
XXX	PLUMBING FIXTURE/EQUIPMENT TAG
# / A-X	DETAIL OR SECTION REFERENCE

PIPE SYMBOLS:

	PIPE TURNING UP/DOWN
	TEE TURNING UP/DOWN
	SHUT-OFF VALVE (BALL TYPE)
	PRESSURE REGULATOR
	END CAP

ALL THE DESIGN AND DETAILS ON THIS PLAN ARE THE PROPERTY OF LIGHTNING ENGINEERING AND SHALL NOT BE USED, COPIED OR REPRODUCED WITHOUT THE WRITTEN PERMISSION OF LIGHTNING ENGINEERING.

I HEREBY CERTIFY AS THE BUILDING DESIGN ENGINEER OF RECORD, THAT THE BUILDING DESIGN AS SHOWN ON THESE PLAN AND AS ACCOMPANIED BY DESIGN & SUPPORT DOCUMENTS, COMPLIES WITH THE BUILDING CODES. THIS CERTIFICATION DOES NOT INCLUDE ROOF TRUSS COMPONENTS OF WHICH THE TRUSS DESIGN ENGINEER IS THE ENGINEER OF RECORD. THE TRUSS MANUFACTURER IS RESPONSIBLE FOR COMPLIANCE WITH THE BUILDING CODE WITH SUPPLEMENTS.

LIGHTNING ENGINEERING
4161 TAMIAMI TRAIL UNIT 101.
PORT CHARLOTTE, FL 33980
PH: 941-979-3500
FAX: 941-979-8195

PROJECT NAME & ADDRESS:

NOVA PARKS

46442 PARK CHALET PL, STERLING, VIRGINIA, 20165

MARC O'GRADY DESIGN

No.	Description	Date
1		
2		
3		
4		
5		

DRAWN BY: PLC

REVISED BY: JPP

PROJECT NO: 26 173 78

SHEET TITLE:

PLUMBING DETAILS

SHEET NUMBER:

PD-101